Return to Master TOC
View Safety Info
Return to Master TOC
View Safety Info
Return to Master TOC
View Safety Info
Return to Master TOC
View Safety Info

RETURN TO MAIN MENU

**SVM129-B**
OCTOBER, 2006

# INVERTEC® STT™ & STT II™

For use with machine code numbers:**10151,10152,10153,10309,10381,10382,10383,11090,11091,11092, 11115,11116**

## Safety Depends on You

Lincoln arc welding and cutting equipment is designed and built with safety in mind. However, your overall safety can be increased by proper installation . . . and thoughtful operation on your part. **DO NOT INSTALL, OPERATE OR REPAIR THIS EQUIPMENT WITHOUT READING THIS MANUAL AND THE SAFETY PRECAUTIONS CONTAINED THROUGHOUT.** And, most importantly, think before you act and be careful.

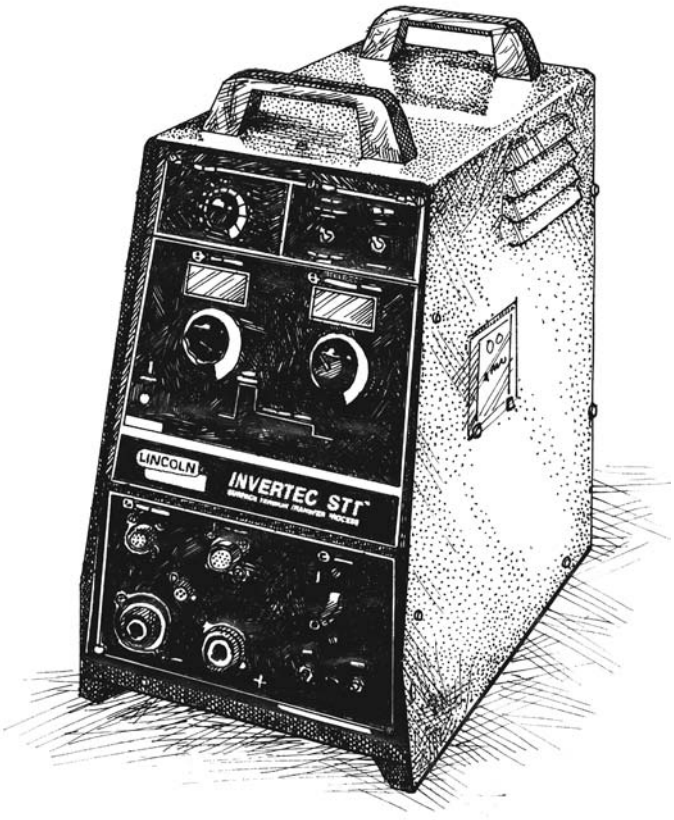


# SERVICE MANUAL

Copyright © 2006 Lincoln Global Inc.

LINCOLN® ELECTRIC

• World's Leader in Welding and Cutting Products •
• Sales and Service through Subsidiaries and Distributors Worldwide •
Cleveland, Ohio 44117-1199 U.S.A. TEL: 1-888-935-3877 FAX: 216.486.1751 WEB SITE: www.lincolnelectric.com

Return to Master TOC
Return to Master TOC
Return to Master TOC
Return to Master TOC

# ⚠ WARNING

## ⚠ CALIFORNIA PROPOSITION 65 WARNINGS ⚠

Diesel engine exhaust and some of its constituents are known to the State of California to cause cancer, birth defects, and other reproductive harm.

The Above For Diesel Engines

The engine exhaust from this product contains chemicals known to the State of California to cause cancer, birth defects, or other reproductive harm.

The Above For Gasoline Engines

**ARC WELDING CAN BE HAZARDOUS. PROTECT YOURSELF AND OTHERS FROM POSSIBLE SERIOUS INJURY OR DEATH. KEEP CHILDREN AWAY. PACEMAKER WEARERS SHOULD CONSULT WITH THEIR DOCTOR BEFORE OPERATING.**

Read and understand the following safety highlights. For additional safety information, it is strongly recommended that you purchase a copy of "Safety in Welding & Cutting - ANSI Standard Z49.1" from the American Welding Society, P.O. Box 351040, Miami, Florida 33135 or CSA Standard W117.2-1974. A Free copy of "Arc Welding Safety" booklet E205 is available from the Lincoln Electric Company, 22801 St. Clair Avenue, Cleveland, Ohio 44117-1199.

**BE SURE THAT ALL INSTALLATION, OPERATION, MAINTENANCE AND REPAIR PROCEDURES ARE PERFORMED ONLY BY QUALIFIED INDIVIDUALS.**

## FOR ENGINE powered equipment.

1.a. Turn the engine off before troubleshooting and maintenance work unless the maintenance work requires it to be running.

1.b. Operate engines in open, well-ventilated areas or vent the engine exhaust fumes outdoors.

1.c. Do not add the fuel near an open flame welding arc or when the engine is running. Stop the engine and allow it to cool before refueling to prevent spilled fuel from vaporizing on contact with hot engine parts and igniting. Do not spill fuel when filling tank. If fuel is spilled, wipe it up and do not start engine until fumes have been eliminated.

1.d. Keep all equipment safety guards, covers and devices in position and in good repair.Keep hands, hair, clothing and tools away from V-belts, gears, fans and all other moving parts when starting, operating or repairing equipment.

1.e. In some cases it may be necessary to remove safety guards to perform required maintenance. Remove guards only when necessary and replace them when the maintenance requiring their removal is complete. Always use the greatest care when working near moving parts.

1.f. Do not put your hands near the engine fan. Do not attempt to override the governor or idler by pushing on the throttle control rods while the engine is running.

1.g. To prevent accidentally starting gasoline engines while turning the engine or welding generator during maintenance work, disconnect the spark plug wires, distributor cap or magneto wire as appropriate.

1.h. To avoid scalding, do not remove the radiator pressure cap when the engine is hot.

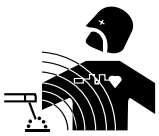

## ELECTRIC AND MAGNETIC FIELDS may be dangerous

2.a. Electric current flowing through any conductor causes localized Electric and Magnetic Fields (EMF). Welding current creates EMF fields around welding cables and welding machines

2.b. EMF fields may interfere with some pacemakers, and welders having a pacemaker should consult their physician before welding.

2.c. Exposure to EMF fields in welding may have other health effects which are now not known.

2.d. All welders should use the following procedures in order to minimize exposure to EMF fields from the welding circuit:

2.d.1. Route the electrode and work cables together - Secure them with tape when possible.

2.d.2. Never coil the electrode lead around your body.

2.d.3. Do not place your body between the electrode and work cables. If the electrode cable is on your right side, the work cable should also be on your right side.

2.d.4. Connect the work cable to the workpiece as close as possible to the area being welded.

2.d.5. Do not work next to welding power source.

Mar '95

Return to Master TOC
Return to Master TOC
Return to Master TOC
Return to Master TOC

## ELECTRIC SHOCK can kill.

3.a. The electrode and work (or ground) circuits are electrically "hot" when the welder is on. Do not touch these "hot" parts with your bare skin or wet clothing. Wear dry, hole-free gloves to insulate hands.

3.b. Insulate yourself from work and ground using dry insulation. Make certain the insulation is large enough to cover your full area of physical contact with work and ground.

**In addition to the normal safety precautions, if welding must be performed under electrically hazardous conditions (in damp locations or while wearing wet clothing; on metal structures such as floors, gratings or scaffolds; when in cramped positions such as sitting, kneeling or lying, if there is a high risk of unavoidable or accidental contact with the workpiece or ground) use the following equipment:**

- **Semiautomatic DC Constant Voltage (Wire) Welder.**
- **DC Manual (Stick) Welder.**
- **AC Welder with Reduced Voltage Control.**

3.c. In semiautomatic or automatic wire welding, the electrode, electrode reel, welding head, nozzle or semiautomatic welding gun are also electrically "hot".

3.d. Always be sure the work cable makes a good electrical connection with the metal being welded. The connection should be as close as possible to the area being welded.

3.e. Ground the work or metal to be welded to a good electrical (earth) ground.

3.f. Maintain the electrode holder, work clamp, welding cable and welding machine in good, safe operating condition. Replace damaged insulation.

3.g. Never dip the electrode in water for cooling.

3.h. Never simultaneously touch electrically "hot" parts of electrode holders connected to two welders because voltage between the two can be the total of the open circuit voltage of both welders.

3.i. When working above floor level, use a safety belt to protect yourself from a fall should you get a shock.

3.j. Also see Items 6.c. and 8.

## ARC RAYS can burn.

4.a. Use a shield with the proper filter and cover plates to protect your eyes from sparks and the rays of the arc when welding or observing open arc welding. Headshield and filter lens should conform to ANSI Z87. I standards.

4.b. Use suitable clothing made from durable flame-resistant material to protect your skin and that of your helpers from the arc rays.

4.c. Protect other nearby personnel with suitable, non-flammable screening and/or warn them not to watch the arc nor expose themselves to the arc rays or to hot spatter or metal.

## FUMES AND GASES can be dangerous.

5.a. Welding may produce fumes and gases hazardous to health. Avoid breathing these fumes and gases.When welding, keep your head out of the fume. Use enough ventilation and/or exhaust at the arc to keep fumes and gases away from the breathing zone. **When welding with electrodes which require special ventilation such as stainless or hard facing (see instructions on container or MSDS) or on lead or cadmium plated steel and other metals or coatings which produce highly toxic fumes, keep exposure as low as possible and below Threshold Limit Values (TLV) using local exhaust or mechanical ventilation. In confined spaces or in some circumstances, outdoors, a respirator may be required. Additional precautions are also required when welding on galvanized steel.**

5. b. The operation of welding fume control equipment is affected by various factors including proper use and positioning of the equipment, maintenance of the equipment and the specific welding procedure and application involved. Worker exposure level should be checked upon installation and periodically thereafter to be certain it is within applicable OSHA PEL and ACGIH TLV limits.

5.c. Do not weld in locations near chlorinated hydrocarbon vapors coming from degreasing, cleaning or spraying operations. The heat and rays of the arc can react with solvent vapors to form phosgene, a highly toxic gas, and other irritating products.

5.d. Shielding gases used for arc welding can displace air and cause injury or death. Always use enough ventilation, especially in confined areas, to insure breathing air is safe.

5.e. Read and understand the manufacturer's instructions for this equipment and the consumables to be used, including the material safety data sheet (MSDS) and follow your employer's safety practices. MSDS forms are available from your welding distributor or from the manufacturer.

5.f. Also see item 1.b.

AUG 06

Return to Master TOC
Return to Master TOC
Return to Master TOC
Return to Master TOC

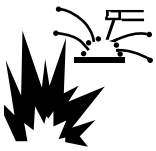

## WELDING SPARKS can cause fire or explosion.

6.a. Remove fire hazards from the welding area. If this is not possible, cover them to prevent the welding sparks from starting a fire. Remember that welding sparks and hot materials from welding can easily go through small cracks and openings to adjacent areas. Avoid welding near hydraulic lines. Have a fire extinguisher readily available.

6.b. Where compressed gases are to be used at the job site, special precautions should be used to prevent hazardous situations. Refer to “Safety in Welding and Cutting” (ANSI Standard Z49.1) and the operating information for the equipment being used.

6.c. When not welding, make certain no part of the electrode circuit is touching the work or ground. Accidental contact can cause overheating and create a fire hazard.

6.d. Do not heat, cut or weld tanks, drums or containers until the proper steps have been taken to insure that such procedures will not cause flammable or toxic vapors from substances inside. They can cause an explosion even though they have been “cleaned”. For information, purchase “Recommended Safe Practices for the Preparation for Welding and Cutting of Containers and Piping That Have Held Hazardous Substances”, AWS F4.1 from the American Welding Society (see address above).

6.e. Vent hollow castings or containers before heating, cutting or welding. They may explode.

6.f. Sparks and spatter are thrown from the welding arc. Wear oil free protective garments such as leather gloves, heavy shirt, cuffless trousers, high shoes and a cap over your hair. Wear ear plugs when welding out of position or in confined places. Always wear safety glasses with side shields when in a welding area.

6.g. Connect the work cable to the work as close to the welding area as practical. Work cables connected to the building framework or other locations away from the welding area increase the possibility of the welding current passing through lifting chains, crane cables or other alternate circuits. This can create fire hazards or overheat lifting chains or cables until they fail.

6.h. Also see item 1.c.

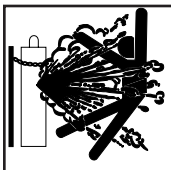

## CYLINDER may explode if damaged.

7.a. Use only compressed gas cylinders containing the correct shielding gas for the process used and properly operating regulators designed for the gas and pressure used. All hoses, fittings, etc. should be suitable for the application and maintained in good condition.

7.b. Always keep cylinders in an upright position securely chained to an undercarriage or fixed support.

7.c. Cylinders should be located:

- Away from areas where they may be struck or subjected to physical damage.
- A safe distance from arc welding or cutting operations and any other source of heat, sparks, or flame.

7.d. Never allow the electrode, electrode holder or any other electrically “hot” parts to touch a cylinder.

7.e. Keep your head and face away from the cylinder valve outlet when opening the cylinder valve.

7.f. Valve protection caps should always be in place and hand tight except when the cylinder is in use or connected for use.

7.g. Read and follow the instructions on compressed gas cylinders, associated equipment, and CGA publication P-l, “Precautions for Safe Handling of Compressed Gases in Cylinders,” available from the Compressed Gas Association 1235 Jefferson Davis Highway, Arlington, VA 22202.

## FOR ELECTRICALLY powered equipment.

8.a. Turn off input power using the disconnect switch at the fuse box before working on the equipment.

8.b. Install equipment in accordance with the U.S. National Electrical Code, all local codes and the manufacturer’s recommendations.

8.c. Ground the equipment in accordance with the U.S. National Electrical Code and the manufacturer’s recommendations.

Mar ‘95

Return to Master TOC
Return to Master TOC
Return to Master TOC
Return to Master TOC

# PRÉCAUTIONS DE SÛRETÉ

Pour votre propre protection lire et observer toutes les instructions et les précautions de sûreté specifiques qui parraissent dans ce manuel aussi bien que les précautions de sûreté générales suivantes:

**Sûreté Pour Soudage A L'Arc**

1. Protegez-vous contre la secousse électrique:

   a. Les circuits à l'électrode et à la piéce sont sous tension quand la machine à souder est en marche. Eviter toujours tout contact entre les parties sous tension et la peau nue ou les vétements mouillés. Porter des gants secs et sans trous pour isoler les mains.
   b. Faire trés attention de bien s'isoler de la masse quand on soude dans des endroits humides, ou sur un plancher metallique ou des grilles metalliques, principalement dans les positions assis ou couché pour lesquelles une grande partie du corps peut être en contact avec la masse.
   c. Maintenir le porte-électrode, la pince de masse, le câble de soudage et la machine à souder en bon et sûr état defonctionnement.
   d.Ne jamais plonger le porte-électrode dans l'eau pour le refroidir.
   e. Ne jamais toucher simultanément les parties sous tension des porte-électrodes connectés à deux machines à souder parce que la tension entre les deux pinces peut être le total de la tension à vide des deux machines.
   f. Si on utilise la machine à souder comme une source de courant pour soudage semi-automatique, ces precautions pour le porte-électrode s'applicuent aussi au pistolet de soudage.

2. Dans le cas de travail au dessus du niveau du sol, se protéger contre les chutes dans le cas ou on recoit un choc. Ne jamais enrouler le câble-électrode autour de n'importe quelle partie du corps.

3. Un coup d'arc peut être plus sévère qu'un coup de soliel, donc:

   a. Utiliser un bon masque avec un verre filtrant approprié ainsi qu'un verre blanc afin de se protéger les yeux du rayonnement de l'arc et des projections quand on soude ou quand on regarde l'arc.
   b. Porter des vêtements convenables afin de protéger la peau de soudeur et des aides contre le rayonnement de l'arc.
   c. Protéger l'autre personnel travaillant à proximité au soudage à l'aide d'écrans appropriés et non-inflammables.

4. Des gouttes de laitier en fusion sont émises de l'arc de soudage. Se protéger avec des vêtements de protection libres de l'huile, tels que les gants en cuir, chemise épaisse, pantalons sans revers, et chaussures montantes.

5. Toujours porter des lunettes de sécurité dans la zone de soudage. Utiliser des lunettes avec écrans lateraux dans les zones où l'on pique le laitier.

6. Eloigner les matériaux inflammables ou les recouvrir afin de prévenir tout risque d'incendie dû aux étincelles.

7. Quand on ne soude pas, poser la pince à une endroit isolé de la masse. Un court-circuit accidental peut provoquer un échauffement et un risque d'incendie.

8. S'assurer que la masse est connectée le plus prés possible de la zone de travail qu'il est pratique de le faire. Si on place la masse sur la charpente de la construction ou d'autres endroits éloignés de la zone de travail, on augmente le risque de voir passer le courant de soudage par les chaines de levage, câbles de grue, ou autres circuits. Cela peut provoquer des risques d'incendie ou d'echauffement des chaines et des câbles jusqu'à ce qu'ils se rompent.

9. Assurer une ventilation suffisante dans la zone de soudage. Ceci est particuliérement important pour le soudage de tôles galvanisées plombées, ou cadmiées ou tout autre métal qui produit des fumeés toxiques.

10. Ne pas souder en présence de vapeurs de chlore provenant d'opérations de dégraissage, nettoyage ou pistolage. La chaleur ou les rayons de l'arc peuvent réagir avec les vapeurs du solvant pour produire du phosgéne (gas fortement toxique) ou autres produits irritants.

11. Pour obtenir de plus amples renseignements sur la sûreté, voir le code "Code for safety in welding and cutting" CSA Standard W 117.2-1974.

# PRÉCAUTIONS DE SÛRETÉ POUR LES MACHINES À SOUDER À TRANSFORMATEUR ET À REDRESSEUR

1. Relier à la terre le chassis du poste conformement au code de l'électricité et aux recommendations du fabricant. Le dispositif de montage ou la piece à souder doit être branché à une bonne mise à la terre.

2. Autant que possible, l'installation et l'entretien du poste seront effectués par un électricien qualifié.

3. Avant de faires des travaux à l'interieur de poste, la debrancher à l'interrupteur à la boite de fusibles.

4. Garder tous les couvercles et dispositifs de sûreté à leur place.

# MASTER TABLE OF CONTENTS FOR ALL SECTIONS



RETURN TO MAIN MENU

Page

**Safety** ..... i-iv

**Installation** ..... **Section A**

**Operation** ..... **Section B**

**Accessories** ..... **Section C**

**Maintenance** ..... **Section D**

**Theory of Operation** ..... **Section E**

**Troubleshooting and Repair** ..... **Section F**

**Electrical Diagrams** ..... **Section G**

**STT Parts** ..... **P257**

**STT II Parts** ..... **P294**

Section A-1

# TABLE OF CONTENTS
# - INSTALLATION SECTION -

**Installation** ..... **Section A**
Technical Specifications (Codes 11092 & Below) ..... A-2
Technical Specifications (Codes 11115 & 11116) ..... A-3
Location ..... A-4
Stacking ..... A-4
Tilting ..... A-4
Machine Grounding and High Frequency Interference Protection ..... A-4
Input Connections ..... A-4
Supply Connections ..... A-4
Input Cable Installation and Connection ..... A-5
Ground Connection ..... A-5
Input Voltage Reconnect Procedure ..... A-6
Output Connections ..... A-6
Wire Feeder Output Connections ..... A-6

Return to Master TOC
Return to Master TOC
Return to Master TOC
Return to Master TOC

# INSTALLATION

## TECHNICAL SPECIFICATIONS –Invertec STT & STT II (For Codes 11092 and BELOW)

### INPUT- THREE PHASE ONLY

| STANDARD VOLTAGE | INPUT CURRENT AT RATED OUTPUT |
|---|---|
| 208/230/460/3/60 HZ | 32/30/16 |
| 200/220/380/415/440/3/50/60 HZ | 33/30/18/17/16 |

### RATED OUTPUT

| DUTY CYCLE | AMPS | VOLTS AT RATED AMPS |
|---|---|---|
| 60% Duty Cycle | 225 | 29 |
| 100% Duty Cycle | 200 | 28 |

### OUTPUT

| CURRENT RANGE | OPEN CIRCUIT VOLTAGE | AUXILIARY POWER |
|---|---|---|
| Peak Current [1] 0 - 450 Amps<br>Background 0 - 125 Amps | 85 VDC Maximum | 115 [2] VAC @ 4 Amps<br>42 VAC @ 4 Amps |

### RECOMMENDED INPUT WIRE AND FUSE SIZES

| INPUT VOLTAGE AND FREQUENCY | FUSE(SUPER LAG) OR BREAKER SIZE | INPUT AMPERE RATING ON NAMEPLATE | TYPE 75 C COPPER SUPPLY WIRE IN CONDUIT AWG (IEC) SIZES | TYPE 75 C COPPER GROUND WIRE IN CONDUIT AWG (IEC) SIZES |
|---|---|---|---|---|
| 208/60 | 40 | 32 | | |
| 230/60 | 40 | 30 | | |
| 460/60 | 30 | 16 | | |
| 200/50/60 | 40 | 33 | | |
| 220/50/60 | 40 | 30 | 10 (6 $mm^2$) | 10 (6 $mm^2$) |
| 380/50/60 | 30 | 18 | | |
| 415/50/60 | 30 | 17 | | |
| 440/50/60 | 30 | 16 | | |

### PHYSICAL DIMENSIONS

| HEIGHT | WIDTH | DEPTH | WEIGHT |
|---|---|---|---|
| 23.2 in | 13.2 in. | 24.4 in. | 100 lbs. |
| 589 mm | 336 mm | 620 mm | 46 kg |

[1] At low input voltages (below 208 VAC) and input voltages of 380 VAC through 415 VAC there may be a 15% reduction in Peak Current.

[2] 115 VAC not present on European Models.



Return to Section TOC
Return to Master TOC

# INSTALLATION

## TECHNICAL SPECIFICATIONS –Invertec STT II (For Codes 11115 AND 11116)

### INPUT- THREE PHASE ONLY

| STANDARD VOLTAGE | INPUT CURRENT AT RATED OUTPUT |
|---|---|
| 200/208/3/50/60 HZ | 36/34 |
| 200/208/380/400/415/3/50/60 HZ | 36/34/20/19/18 |

### RATED OUTPUT

| DUTY CYCLE | AMPS | VOLTS AT RATED AMPS |
|---|---|---|
| 60% Duty Cycle | 225 | 29 |
| 100% Duty Cycle | 200 | 28 |

### OUTPUT

| CURRENT RANGE | OPEN CIRCUIT VOLTAGE | AUXILIARY POWER |
|---|---|---|
| Peak Current 0 - 450 Amps<br>Background 0 - 125 Amps | 88 VDC Maximum | 115 [1] VAC @ 4 Amps<br>42 VAC @ 4 Amps |

### RECOMMENDED INPUT WIRE AND FUSE SIZES

| INPUT VOLTAGE AND FREQUENCY | FUSE(SUPER LAG) OR BREAKER SIZE | INPUT AMPERE RATING ON NAMEPLATE | TYPE 75 C COPPER SUPPLY WIRE IN CONDUIT AWG (IEC) SIZES | TYPE 75 C COPPER GROUND WIRE IN CONDUIT AWG (IEC) SIZES |
|---|---|---|---|---|
| 200/50/60 | 40 | 36 | | |
| 208/50/60 | 40 | 34 | | |
| 380/50/60 | 30 | 20 | 10 (6 $mm^2$) | 10 (6 $mm^2$) |
| 400/50/60 | 30 | 19 | | |
| 415/50/60 | 30 | 18 | | |

### PHYSICAL DIMENSIONS

| HEIGHT | WIDTH | DEPTH | WEIGHT |
|---|---|---|---|
| 23.2 in | 13.2 in. | 24.4 in. | 100 lbs. |
| 589 mm | 336 mm | 620 mm | 46 kg |

[1] 115 VAC not present on European Models.



Return to Section TOC
Return to Master TOC

**Read and understand entire Installation Section before starting installation.**

**⚠ WARNING**

**ELECTRIC SHOCK can kill.**

- **Only qualified personnel should perform this installation.**
- **Turn the input power OFF at the disconnect switch or fuse box before installing this equipment.**
- **Turn the power switch on the Invertec STT "OFF" before connecting or disconnecting input power lines, output cables, or control cables.**
- **Do not touch electrically hot parts.**
- **Always connect the ground terminal to a good electrical earth ground.**

## SELECT SUITABLE LOCATION

Locate the machine where there is free circulation of clean air. Place the machine so that air can freely circulate into the sides and out of the rear of the machine. Dirt and dust that can be drawn into the machine should be kept to a minimum. Failure to observe these precautions can result in excessive operating temperatures and nuisance shut down of the Invertec STT II.

This machine carries an enclosure rating of IP21S. It should not be placed in extremely damp or dirty locations. It should not be exposed to rain or snow.

### STACKING

The Invertec STT II cannot be stacked.

### TILTING

Place the machine on a secure, level surface otherwise the unit may topple over.

## MACHINE GROUNDING AND HIGH FREQUENCY INTERFERENCE PROTECTION

The machine may not be suitable for use in an environment where high frequency is present. For example do not place the machine in close proximity to "TIG" or "PLASMA" operations. To minimize high frequency interference:

Locate the STT II power source more than 15 feet (4.5 m) away from high frequency units and more than 25 feet (7.6 m) separation between ground connections or welding arcs of high frequency units.

Provide proper electrical ground to the machine per local and national electrical codes.

## INPUT CONNECTIONS

**FAILURE TO FOLLOW THESE INSTRUCTIONS CAN CAUSE IMMEDIATE FAILURE OF COMPONENTS WITHIN THE WELDER.**

Turn the input power off at the disconnect switch before attempting to connect the input power lines.

Connect the green lead of the power cord to ground per local and national electrical codes.

### SUPPLY CONNECTIONS

Be sure the voltage, phase, and frequency of the input supply is as specified on the rating plate. Input Power supply line entry in provided on the case back of the machine. See ***figure A.1*** for location of the rating plate.

The Invertec STT II should be connected only by a qualified electrician. Installation should be made in accordance with local and national codes. Refer to the ***"Technical Specifications"*** at the beginning of this section for proper fuse sizes, ground wire, and input supply power cable sizes.

Some models come from the factory with an input power cord. If your model does not include the input power cord install the proper size input cable and ground cable according to ***"INPUT CABLE INSTALLATION AND CONNECTION".***



Return to Section TOC
Return to Master TOC
Return to Section TOC
Return to Master TOC
Return to Section TOC
Return to Master TOC
Return to Section TOC
Return to Master TOC

Return to Section TOC
Return to Master TOC

CASE BACK

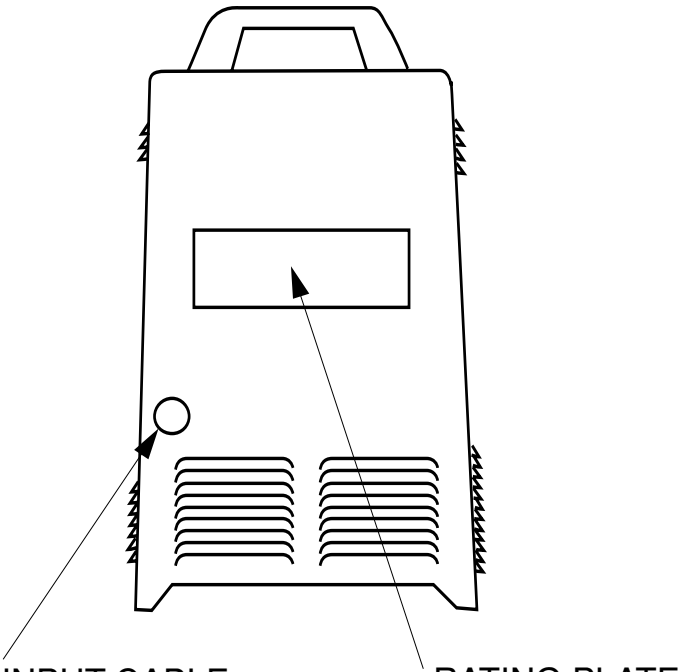


FIGURE A.1 CASE BACK

## INPUT CABLE INSTALLATION AND CONNECTION

A cable strain relief is provided at the supply line entry and is designed to accommodate cable diameters of .310 - 1.070 in. (7.9 - 27.2 mm). On European models the strain relief is designed to accommodate cable diameters of .709 - 1.000 in. (18.0 - 25.4 mm). Refer to "Technical Specifications" at the beginning of this section for the proper input cable sizes. Refer to Figure A.1 and perform the following steps:

1. Remove the wraparound cover of the Invertec STT II.
2. Feed the input cable through the input cable entry access hole at the right rear of the machine.
3. Route the cable through the cable hangers, located along the lower right inside edge of the machine, up to the power switch located on the front panel.
4. Strip away 102 mm (4 in.) of the outer jacket. Trim fillers and strip conductor jackets to connect to the power switch.
5. Connect the three phase line conductors to the power switch terminals labeled U, V and W. Tighten the connections to 3.0 Nm. (27 in.-lb.) torque.

6. Securely tighten the cable strain relief located on the case back of the machine.

## GROUND CONNECTION

1. Connect the ground terminal to earth ground per National Electrical Code.

2. Replace the wraparound cover of the Invertec STT II.

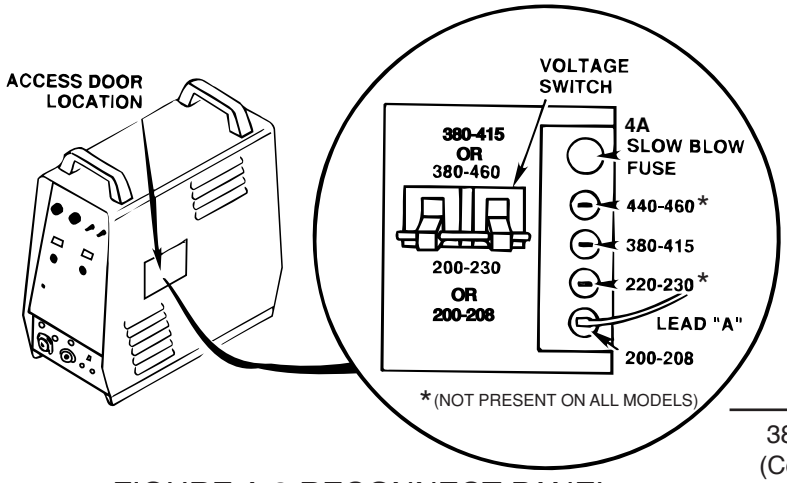


FIGURE A.2 RECONNECT PANEL

## INPUT VOLTAGE RECONNECT PROCEDURE

As shipped from the factory, multiple voltage machines are internally configured for the highest input voltage (440-460 VAC), for Codes 11092 and below and (380-415 VAC), for Codes 11115 and 11116.

1. For Connections to 440 or 460 VAC **verify** the internal configurations to the procedures shown below and refer to Figure A.2.

2. For Connections to 200,208,220,230,380,400 or 415 VAC follow the procedure shown below and refer to figure A.2.

**NOTE: Turn main power to the machine OFF**

**⚠ WARNING**

**before performing the reconnect procedure. Failure to do so will result in damage to the machine. DO NOT switch the reconnect bar with machine power ON.**

---

| To Operate at | Procedure |
|---|---|
| 460 or 440 VAC (Codes 11092 and around. below) | 1. Open reconnect panel access door on wrap-<br>2. Move input voltage switch to Voltage = 380 -460V position.<br>3. Move lead “A” to 440-460 Terminal. |
| 380 or 415 VAC (Codes 11092 and around. below) | 1. Open reconnect panel access door on wrap-<br>2. Move input voltage switch to Voltage = 380-460V position.<br>3. Move lead “A” to 380-415 Terminal. |
| 380,400 or 415 VAC (Codes 11115 and around. 11116) | 1. Open reconnect panel access door on wrap-<br>2. Move input voltage switch to Voltage = 380-460V position.<br>3. Move lead “A” to 380-415 Terminal. |
| 220 or 230 VAC (Codes 11092 and around. below) | 1. Open reconnect panel access door on wrap-<br>2. Move input voltage switch to Voltage = 200 -230V position.<br>3. Move lead “A” to 220-230 Terminal. |
| 200 or 208 VAC (Codes 11092 and around. below) | 1. Open reconnect panel access door on wrap-<br>2. Move input voltage switch to Voltage = 200 -230V position.<br>3. Move lead “A” to 200-208 Terminal. |
| 200 or 208 VAC (Codes 11115 and 11116) | 1. Open reconnect panel access door on wrap-around.<br>2. Move input voltage switch to Voltage = 200 -230V position.<br>3. Move lead “A” to 200-208 Terminal. |

## OUTPUT CONNECTIONS

### WIRE FEEDER OUTPUT CONNECTIONS

Refer to the ***Accessories*** section of this manual for instructions on connecting a wire feeder to the Invertec STT II.

The LN-742 or STT-10 wire feeder is the recommended feeder for use with the Invertec STT II.



Return to Section TOC
Return to Master TOC

# TABLE OF CONTENTS
# - OPERATION SECTION -

**Operation** ..... **Section B**

Safety Precautions ..... B-2
General Description ..... B-3
Recommended Equipment ..... B-3
Operating Controls ..... B-3
Design Features ..... B-3
Welding Capability ..... B-3
Limitations ..... B-3
Operational Features and Controls ..... B-4
Welding Operation ..... B-5
Welding Parameters and Guidelines ..... B-6
Recommended Settings for STT II ..... B-7

Return to Master TOC
Return to Master TOC
Return to Master TOC
Return to Master TOC

Return to Section TOC
Return to Master TOC
Return to Section TOC
Return to Master TOC
Return to Section TOC
Return to Master TOC
Return to Section TOC
Return to Master TOC

# OPERATING INSTRUCTIONS

**Read and understand entire section before operating machine.**

## GENERAL WARNINGS

## SAFETY PRECAUTIONS

**⚠ WARNING**

**ELECTRIC SHOCK can kill.**

- Do not touch electrically live parts or electrode with skin or wet clothing.
- Insulate yourself from work and ground.
- Always wear dry insulating gloves.

**FUMES AND GASES can be dangerous.**

- Keep your head out of fumes.
- Use ventilation or exhaust to remove fumes from breathing zone.

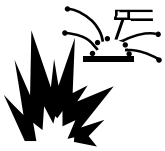

**WELDING SPARKS can cause fire or explosion**

- Keep flammable material away.
- Do not weld on containers that have held combustibles.

**ARC RAYS can burn.**

- Wear eye, ear and body protection.

**Observe additional Safety Guidelines detailed in the beginning of this manual.**

# OPERATION

## GENERAL DESCRIPTION

The Invertec STT II is a 225-ampere inverter based arc welding power source specifically designed for the STT welding process. It is neither a constant current (CC) nor a constant voltage (CV) machine. It is a power source that delivers current of a desired wave form and characteristics that are superior to conventional short circuiting GMAW. The process is optimized for short-circuiting GMAW welding.

## RECOMMENDED EQUIPMENT

The LN-742 or STT-10 wire feeder is recommended for use with the STT II. The LN-7 GMA, LN-9 GMA, NA-5, and NA-5R can all be used with the STT II. However, these units can only be used to feed wire since these feeders have no provision for control of the STT output.

## OPERATING CONTROLS

The Invertec STT II has the following controls as standard: On/Off switch, Peak Current adjustment, Background Current adjustment, Hot Start adjustment, Tailout, and 2 toggle switches; one for wire size selection and one for wire type selection.

## DESIGN FEATURES AND ADVANTAGES

- State of the art inverter technology yields high power efficiency, excellent welding performance, lightweight and compact design.
- Twist-Mate™ output terminals.
- Digital meters for procedure settings are standard.
- Automatic Inductance or Pinch Control.
- Solid state circuitry for extra long component life.
- Current feedback ensures that original procedure settings all remain constant.
- Arc Sense lead assembly (Electrode and Work), connects through a 4-pin case front connector.
- Peak Current and Background Current may be remotely controlled.
- Thermostat and FET over current protector prevent overheating from overloads, high ambient temperatures, or loss of air flow.
- High temperature Class H insulation.
- Protection circuits and ample safety margins prevent damage to the solid state components from transient voltages and high currents.
- Preset welding current capability.
- STT II offers improvements over the previous model. Approximately 40% increase in deposition rate capability, and a significant increase in travel speed.

## WELDING CAPABILITY

The Invertec STT II is rated at 225 amps, 29 volts, at 60% duty cycle on a ten minute basis. It is capable of higher duty cycles at lower output currents. If the duty cycle(s) are exceeded, a thermal protector will shut off the output until the machine cools to a reasonable operating temperature.

## LIMITATIONS

- May not be suitable for use in an environment with High Frequency present. ("See ***Machine Grounding and High Frequency Protection***" in the Installation section of this manual)
- Suitable for indoor use only (IEC IP21S).



Return to Section TOC
Return to Master TOC
Return to Section TOC
Return to Master TOC
Return to Section TOC
Return to Master TOC
Return to Section TOC
Return to Master TOC

# OPERATION

## OPERATIONAL FEATURES AND CONTROLS

All operator controls are located on the case front of the Invertec STT II. Refer to Figure B.1 for locations.

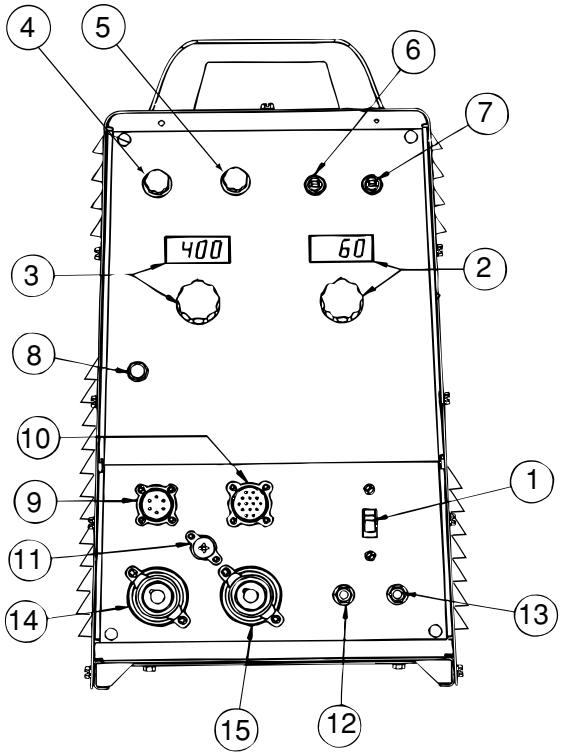


**FIGURE B.1 CASE FRONT CONTROLS**

1. **POWER SWITCH:** Turns output power ON and OFF. This switch also controls auxiliary power available through the 14-pin Wire Feeder Receptacle.

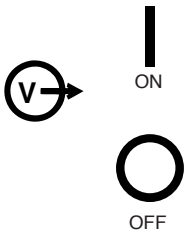


2A. **BACKGROUND CURRENT OUTPUT CONTROL:** The output current is switched to the Background level at the conclusion of the preceding Peak Current pulse. This knob allows preset adjustment of the amplitude of the background current up to 125 amperes.

2B. **BACKGROUND CURRENT DISPLAY METER:** This is a digital meter for displaying the preset Background Current. This meter displays in 1 amp increments. <u>This meter does not indicate the actual welding current, only the preset current.</u>

3A. **PEAK CURRENT OUTPUT CONTROL:** The beginning portion of the welding arc is a pulse of current referred to as Peak Current. This knob allows preset adjustment of the amplitude of the peak current up to 450 amperes.

3B. **PEAK CURRENT DISPLAY METER:** This is a digital meter for displaying the preset Peak Current. This meter displays in 1 amp increments. <u>This meter does not indicate actual welding current only the preset current.</u>

4. **HOT START CONTROL POTENTIOMETER:** "Hot Start" provides approximately 25% to 50% more current during the initial start of the weld for improved arc starting and bead appearance. This control adjusts the duration of this "Hot Start" current. The control range is from 0 to 10, where 0 corresponds to the zero or no "Hot Start", and 10 is maximum for a "Hot Start" lasting for about four (4) seconds.

5. **TAILOUT:** Alters the current waveform to increase deposit rate and travel speed. The Minimum setting sets STT II to the original STT waveform. As tailout is increased peak and Background current may need to be reduced to maintain optimum performance.



Return to Section TOC
Return to Master TOC

# OPERATION

6. **WIRE SIZE SELECT SWITCH:** This toggle switch selects between electrode diameters of .035" (1 mm) and smaller or .045" (1.2 mm) and larger. The .035" (1 mm) position provides improved performance of smaller diameter wires at higher wire feed speeds.

7. **WIRE TYPE SELECT SWITCH:** This toggle switch selects between mild or stainless steel. In the stainless position, the pulse width of the Peak Current is changed from 1 to 2 ms for better performance for stainless steel welding.

8. **THERMAL SHUT-DOWN INDICATOR:** This light will indicate that either the internal thermostat(s) or the FET over current sensor has actuated. Machine output will return after the internal components have returned to normal operating temperature (if the thermostat(s) "opened") or after about 3-7 seconds (if the FET over current sensor activated).

9. **REMOTE RECEPTACLE:** This is a 10 pin MS-type connector for remote control of Peak Current and Background Current. Trigger switch connections are also provided. The presence of the mating connector is automatically sensed, disabling the front panel Peak and Background Current controls. Refer to "REMOTE CONTROL CONNECTOR" in the ACCESSORIES Section of this manual for more information.

10. **WIRE FEEDER RECEPTACLE:** This is 14 pin MS-type connector for the wire feeder connection. 115 and 42 VAC along with the trigger switch connections are provided. (Only 42 VAC is available on European models). There are no provisions for voltage control of the power source by the wire feeder. Refer to the Accessories section of this manual for wire feeder connection instructions.

11. **ARC SENSE RECEPTACLE:** This is a four pin MS-type connector for WORK and ELECTRODE sense leads. The STT requires a WORK sense and ELECTRODE sense lead for proper operation. The ELECTRODE sense lead is bolted together with power source electrode lead at the wire feeder gun block. The WORK sense lead is furnished with an "alligator" type clip for connection to the work piece. Refer to the LN 742 or STT-10 wire feeder connection instructions in the Accessories section of this manual for proper connection of these leads.

12. **42V AUXILIARY POWER CIRCUIT BREAKER:** The 42 VAC supply is protected from excessive current draws with a 6 amp circuit breaker. When the breaker "trips" its button will extend. Depressing this button will reset the breaker.

13. **115V AUXILIARY POWER CIRCUIT BREAKER** (Not on European Models)**:** The 115 VAC supply is protected from excessive current draws with a 6 amp circuit breaker. When the breaker "trips" its button will extend. Depressing this button will reset the breaker.

14. **WORK TERMINAL**: This twist-mate connection is the negative output terminal for connecting a work cable and clamp to the workpiece.



15. **ELECTRODE TERMINAL**: This twist-mate connection is the positive output terminal for connecting an electrode cable to the wire feeder conductor block. Refer to the Accessories Section for wire feeder connection instructions.

## WELDING OPERATION

Familiarize yourself with the controls on the Invertec STT II before beginning to weld.

Familiarize yourself with the operating manual for the wire feeder and the wire feeder controls before beginning to weld.

Set the Wire Size and Wire Type selection switches per the appropriate wire. Refer to "***Operational Features and Controls***" in this section for the function of these switches.



Return to Section TOC
Return to Master TOC

Return to Section TOC
Return to Master TOC

## WELDING PARAMETERS AND GUIDELINES

The Invertec STT II is neither a constant current (CC) nor a constant voltage (CV) power source. In general, wire diameter will be increased one size compared to conventional (CV) power sources. The larger the wire diameter the higher the deposition rate (Up to 1/16"). Wire sizes below .035" are unnecessary for most applications. The Invertec STT II is a current controlled machine which is capable of changing the electrode current quickly in order to respond to the instantaneous requirements of the arc and optimize performance. By sensing changes in welding current, and hence the electrode state, the power source will supply varying output currents to minimize spatter. The Peak and Background currents are two such current outputs that can be adjusted.

Wire Feed Speed controls the deposition rate. Peak Current controls the Arc Length. Background Current controls the Bead Contour. And Tailout increases Power in the Arc.

### PEAK CURRENT

The Peak Current control acts similar to an "arc pinch" control. Peak current serves to establish the arc length and promote good fusion. Higher peak current levels will cause the arc to broaden momentarily while increasing the arc length. If set too high, globular type transfer will occur. Setting this level to low will cause instability and wire stubbing. In practice, this current level should be adjusted for minimum spatter and puddle agitation.

Adjust Arc Length with Peak Current

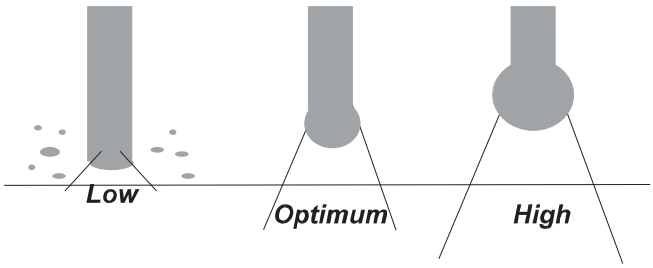


Note: In 100% $CO_2$ shielding gas applications the peak current level should be set greater than in a corresponding application using a gas blend with a high percentage of Argon. Longer initial arc lengths with 100% $CO_2$ are required to reduce spatter.

### BACKGROUND CURRENT

The Background Current provides the control for the overall heat input to the weld. Adjusting this level too high will cause a large droplet to form and globular type transfer to occur resulting in increased spatter. Adjusting this level to low will cause wire stubbing and also poor wetting of the weld metal. This is similar to a low voltage setting on a standard CV machine

Adjust Bead Shape using Background Current

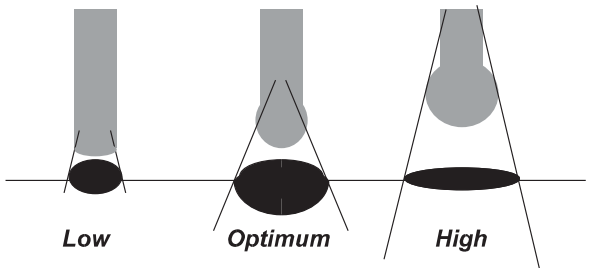


Note: Background Current levels for applications using 100% $CO_2$ is less than similar procedures involving gas blends with high percentages of Argon. This is a result of the greater heat generated in the 100% $CO_2$ arc. (100% $CO_2$ is 35 volts/cm and 100% Argon is 20 volts/cm. 75% Argon, 25% $CO_2$ is about 24 volts/cm.

Contact Tip to Work Distance

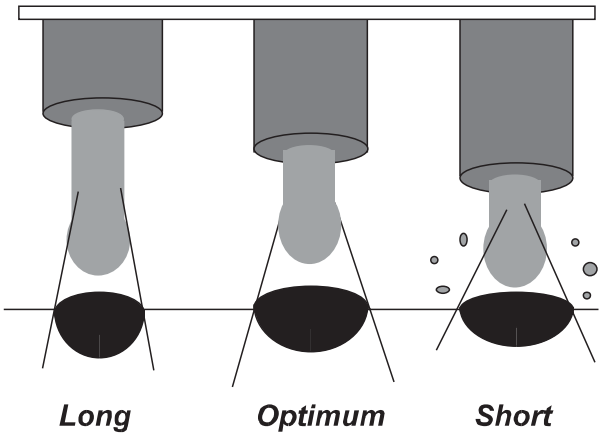


### HOT START

The Hot Start control can be set to enhance establishing the arc and provide the capability of increasing the heat at the start of the weld to compensate for a cold work piece. Hot start adjusts the time that additional current is applied during the starting of the arc. Refer to ***"Operational Features and Controls"*** in this section for a description of this control.

### TAILOUT

The tail out provides additional heat without the molten droplet becoming too large. Increase as necessary to add "Heat" to the arc without increasing arc length. (This will allow for faster travel speeds and produce improved wetting). As tailout is increased, the peal and/or background current is usually reduced.

### WELDING ARC PERFORMANCE

For optimum spatter reduction, the arc should be concentrated on the puddle.

# OPERATION

## WELDING PROCEDURES FOR STT II - (Steel) Horizontal Fillet (See Table B.1 and B.2)

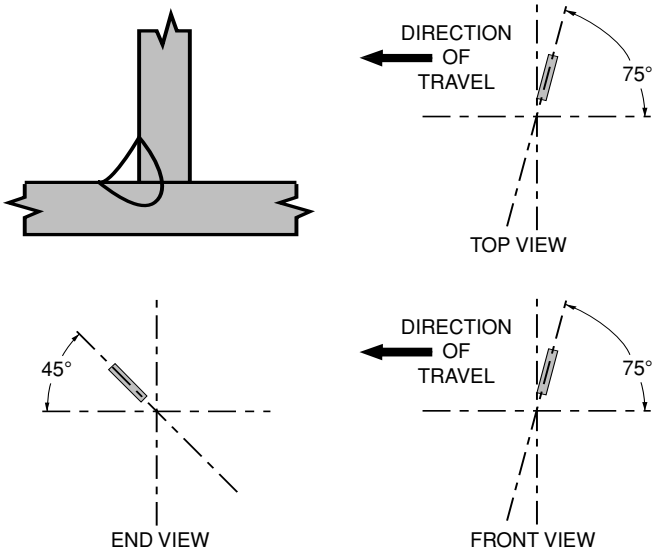


**Table B.1**
**100% $CO_2$ Gas Shield (Set for Steel Mode)**

| Plate Thickness " (mm) | 20 ga (0.9) | 14 ga (2.0) | 10 ga (3.25) |
|---|---|---|---|
| Electrode size " (mm) | 0.035 (0.9) | 0.045 (1.1) | 0.045 (1.1) |
| WFS "/min (m/min) | 100 (2.5) | 100 (2.5) | 170 (4.2) |
| Peak Current | 220 | 260 | 280 |
| Background Current | 30 | 40 | 65 |
| Tailout setting | 3 | 7 | 5 |
| Average Amperage | 60 | 105 | 120 |
| Travel Speed "/min (m/min) | 12 (0.3) | 12 (0.3) | 12 (0.3) |
| Gas Flow cfh (L/min) | 25 (12) | | |
| Electrical Stickout " (mm) | 1/4 - 3/8 (6.4 - 10) | | |

**Table B.2**
**75% $CO_2$ - 25% Ar Gas Shield (Set for Steel Mode)**

| Plate Thickness " (mm) | 20 ga (0.9) | 14 ga (2.0) | 10 ga (3.25) |
|---|---|---|---|
| Electrode size " (mm) | 0.035 (0.9) | 0.045 (1.1) | 0.045 (1.1) |
| WFS "/min (m/min) | 100 (2.5) | 100 (2.5) | 120 (3.0) |
| Peak Current | 225 | 270 | 310 |
| Background Current | 40 | 65 | 70 |
| Tailout setting | 8 | 4 | 6 |
| Average Amperage | 70 | 110 | 130 |
| Travel Speed "/min (m/min) | 12 (0.3) | 12 (0.3) | 12 (0.3) |
| Gas Flow cfh (L/min) | 25 (12) | | |
| Electrical Stickout " (mm) | 1/4 - 3/8 (6.4 - 10) | | |

## (Stainless Steel) Horizontal Fillet (See Table B.3 and B.4)

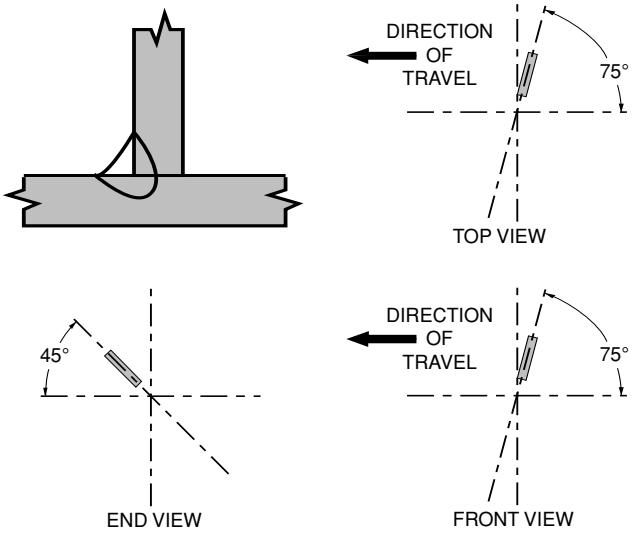


**Table B.3**
**90% He, 7.5% Ar, 2.5% $CO_2$**
**Gas Shield (Set for Steel Mode)**

| Plate Thickness " (mm) | 20 ga (0.9) | 14 ga (2.0) | 10 ga (3.25) |
|---|---|---|---|
| Electrode size " (mm) | 0.035 (0.9) | 0.045 (1.1) | 0.045 (1.1) |
| WFS "/min (m/min) | 100 (2.5) | 130 (3.3) | 170 (4.2) |
| Peak Current | 165 | 210 | 250 |
| Background Current | 35 | 60 | 85 |
| Tailout setting | 7 | 7 | 4 |
| Average Amperage | 40 | 95 | 120 |
| Travel Speed "/min (m/min) | 12 (0.3) | 16 (0.4) | 16 (0.4) |
| Gas Flow cfh (L/min) | 25 (12) | | |
| Electrical Stickout " (mm) | 1/4 - 3/8 (6.4 - 10) | | |

**Table B.4**
**98% Ar, 2% $O_2$**
**Gas Shield (Set for Stainless Steel Mode)**

| Plate Thickness " (mm) | 20 ga (0.9) | 14 ga (2.0) | 10 ga (3.25) |
|---|---|---|---|
| Electrode size " (mm) | 0.035 (0.9) | 0.045 (1.1) | 0.045 (1.1) |
| WFS "/min (m/min) | 100 (2.5) | 130 (3.3) | 170 (4.2) |
| Peak Current | 145 | 190 | 280 |
| Background Current | 45 | 95 | 95 |
| Tailout setting | 7 | 8 | 7 |
| Average Amperage | 60 | 120 | 150 |
| Travel Speed "/min (m/min) | 12 (0.3) | 12 (0.3) | 12 (0.3) |
| Gas Flow cfh (L/min) | 25 (12) | | |
| Electrical Stickout " (mm) | 1/4 - 3/8 (6.4 - 10) | | |



Return to Section TOC
Return to Master TOC

# NOTES

B-8

Return to Section TOC
Return to Master TOC
Return to Section TOC
Return to Master TOC
Return to Section TOC
Return to Master TOC
Return to Section TOC
Return to Master TOC

# TABLE OF CONTENTS
# - ACCESSORIES -

**Accessories**.....**Section C**
Options/Accessories .....C-2
LN-742 Wire Feeder Connection Instructions.....C-3
Connection Diagram .....C-4

Return to Master TOC
Return to Master TOC
Return to Master TOC
Return to Master TOC

Return to Section TOC
Return to Master TOC

## OPTIONS / ACCESSORIES

**K940 SENSE LEADS:** These leads are used to accurately sense arc voltage. One set is required for each STT II power source. A 10 ft and 25 ft set are provided as standard with the machine. Additional sets are available in 10 ft (K940-10), 25 ft (K940-25) and 50 ft (K940-50) lengths.

**K942-1 REMOTE CONTROL:** Allows remote adjustment of Peak and Background Current settings.

**REMOTE RECEPTACLE (For optional remote interface, Connection to the STT-10 Wire Feeder or Robotic Control)**

1. The 10 pin MS connector labeled “Remote Control” located on the front panel of the STT is used for remote control of the power source. Control for the PEAK (PB pot) and BACKGROUND (BG pot) current along with the trigger switch is provide through this connector.

2. Refer to figure C.1 below for details about the remote receptacle (J38). Note that pins “J” and “B” are shorted together This “short circuit” tells the STT control board to accept PEAK and BACKGROUND inputs on this connector rather than from the front panel controls. If this short is removed, the front panel controls will be active. By adding a switch between pins “J” and “B” a “LOCAL/REMOTE” control switch can be created. (Switch open for “local” and closed for “remote”)

3. For robotic control of the PEAK CURRENT, a 0 to +10 volt DC signal is applied between pins “A” and “G” with + applied to pin “G”. The BACKGROUND CURRENT is controlled with a similar signal applied between pins “A” and “C” with + applied to pin “C”. In this application pins “J” and “B” must be shorted as described in 2 above.

**NOTE: These analog signals should be isolated from the robot circuitry to prevent interference.**

4. The trigger switch is connected between pins “D” and “F”. These connections are in parallel with the trigger switch from the wire feeder.

5. The digital meters for PEAK and BACKGROUND currents will show preset values in both local and remote operation.

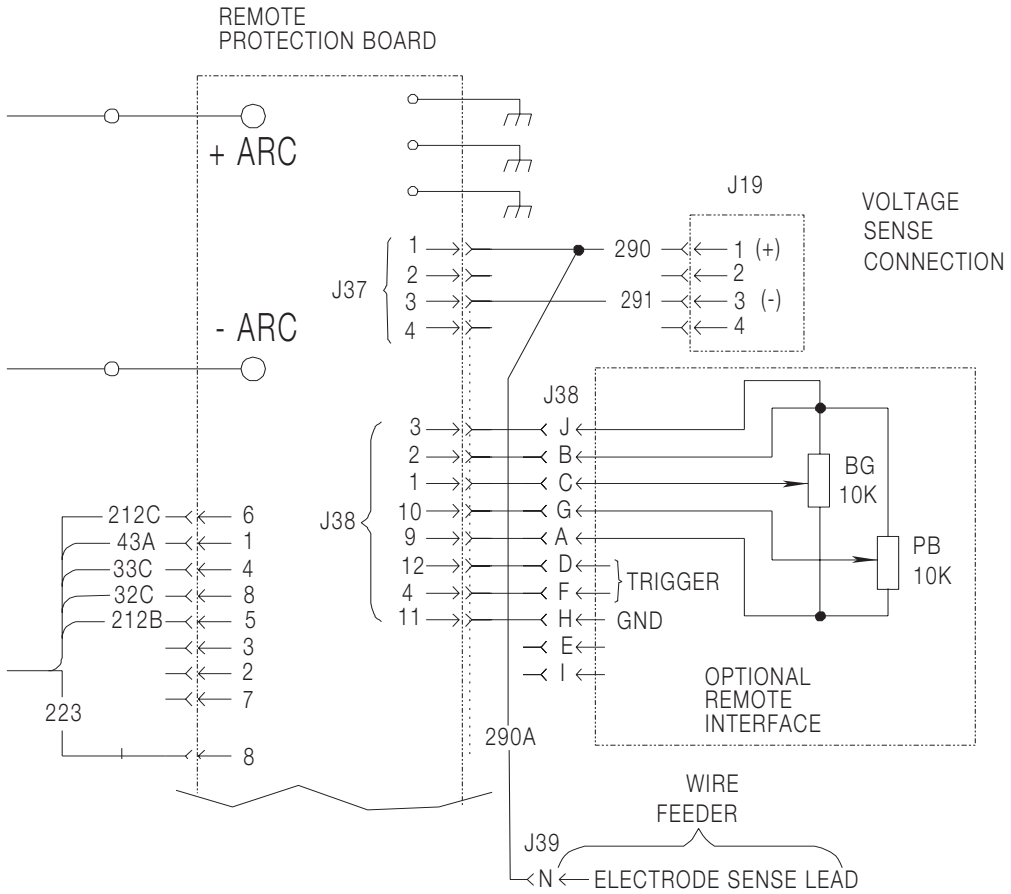


PORTION OF G3136 WIRING DIAGRAM
REFER TO ACTUAL DIAGRAM PASTED INSIDE YOUR MACHINE

Return to Section TOC
Return to Master TOC

## LN-742 or STT-10 WIRE FEEDER CONNECTION INSTRUCTIONS

The LN-742 or STT-10 is the recommended wire feeder for use with the Invertec STT II. Refer to the LN-742 or STT-10 Operator Manual for Wire Feed Operation. Refer to Figure C.2 or ***C.3*** and follow the instructions below to connect the LN-742 or STT-10.

**⚠ WARNING**

**ELECTRIC SHOCK can kill.**
- **Only qualified personnel should perform this installation.**
- **Turn the input power OFF at the disconnect switch or fuse box before connecting the wire feeder**

1. Turn the Invertec STT II power off.

2. Connect the ARC SENSE LEAD MS connector to the mating connector on STT II front panel.

3. Connect the electrode lead (Twist-Mate) to (+) output terminal on STT II.

4. Connect the other end of electrode lead (Step #3) and the ARC SENSE LEAD (lead with ring lug, step #2) together to the gun block on the LN 742.

5. Connect work lead between STT (-) terminal and the work piece.

6. Connect the ARC SENSE LEAD "WORK" (lead with alligator clip) to work piece.

**NOTE: For best welding performance make this connection as close as possible to the welding arc.**

7. Connect the wire feeder control cable between the LN-742 or STT-10 and the 14-pin Wire Feeder Receptacle on the STT II. For the STT-10 Wire Feeder: Connect the second wire feeder control cable between the STT-10 and the 10-pin Remote Receptacle on the STT II.

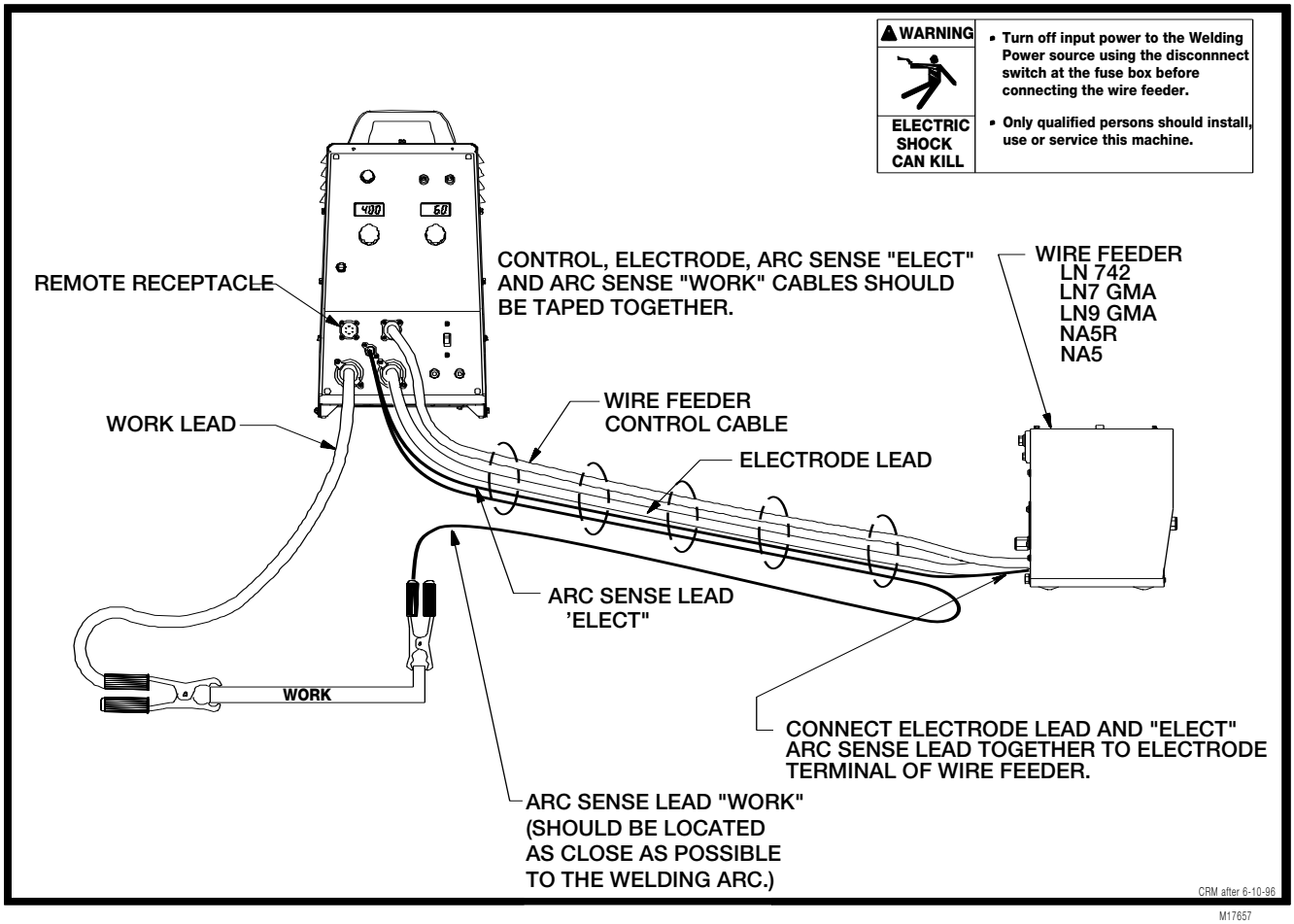


**FIGURE C.2 LN-742 to STT II CONNECTION**

# ACCESSORIES

## CONNECTION DIAGRAM - INVERTEC STT II

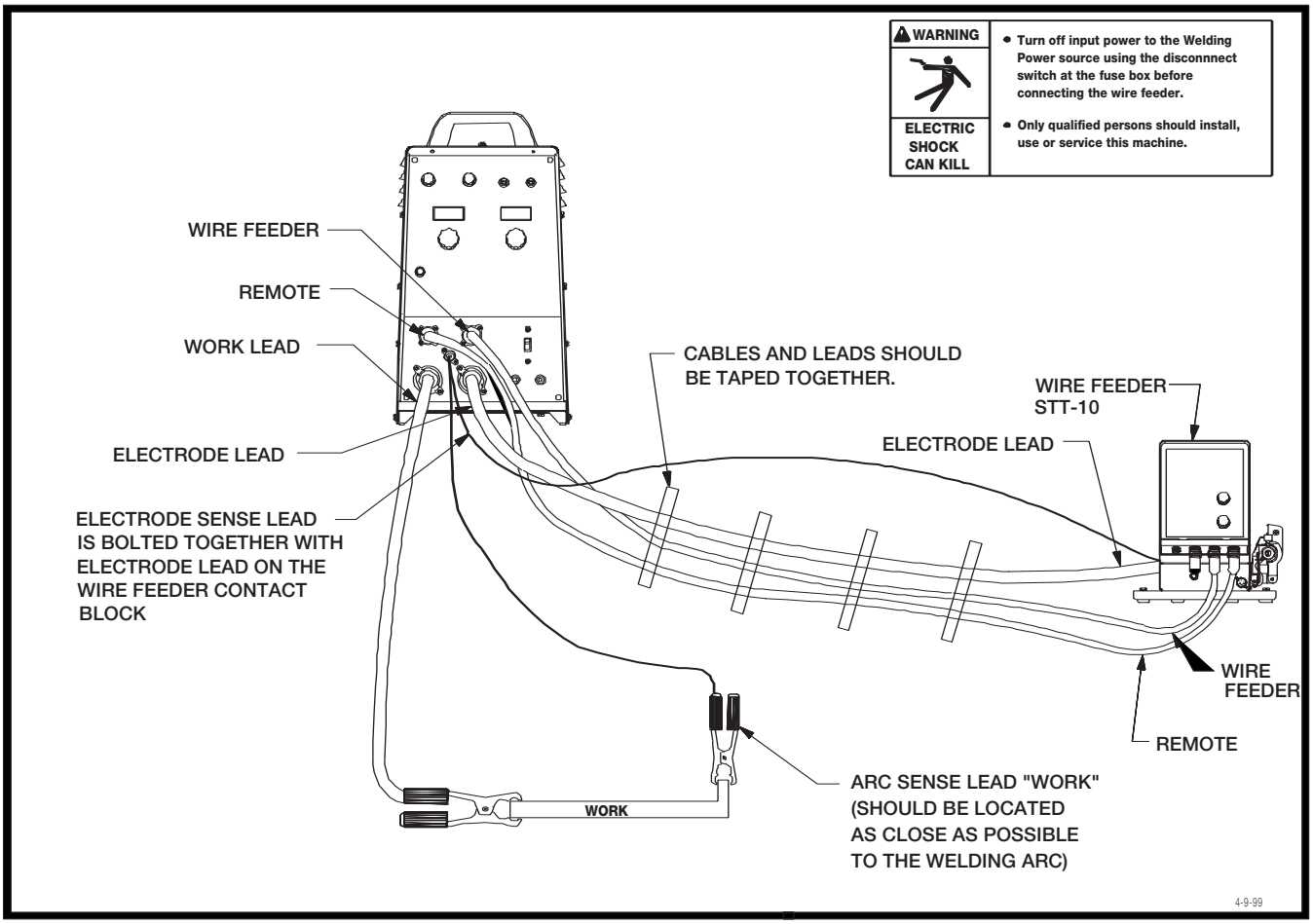


FIGURE C.3 STT-10 to STT II CONNECTION



Return to Section TOC
Return to Master TOC

# TABLE OF CONTENTS
# -MAINTENANCE-

**Maintenance** ..... **Section D**

Input Filter Capacitor Discharge Procedure ..... D-2

Preventive Maintenance ..... D-3

Major Component Locations ..... D-4

Return to Master TOC
Return to Master TOC
Return to Master TOC
Return to Master TOC

Return to Section TOC
Return to Master TOC

**⚠ WARNING**

**Failure to follow this capacitor discharge procedure can result in electric shock.**

## INPUT FILTER CAPACITOR DISCHARGE PROCEDURE

1. Turn off input power or disconnect input power lines.

2. Remove hex head screws from side and top of machine and remove wrap-around machine cover.

3. Be careful not to make contact with the capacitor terminals that are located in the center of the Switch Boards.

4. Obtain a high resistance and high wattage resistor (25-1000 ohms and 25 watts minimum). This resistor is not supplied with machine. **NEVER USE A SHORTING STRAP FOR THIS PROCEDURE.**

5. Locate the two capacitor terminals (large hex head cap screws) shown in Figure D.1.

6. Use safety glasses, electrically insulated gloves and insulated pliers. Hold body of the resistor and connect resistor leads across the two capacitor terminals. Hold resistor in place for 10 seconds. DO NOT TOUCH CAPACITOR TERMINALS WITH YOUR BARE HANDS.

7. Repeat discharge procedure for capacitor on other side of machine.

8. Check voltage across terminals of all capacitors with a DC voltmeter. Polarity of capacitor terminals is marked on PC board above terminals. Voltage should be zero. If any voltage remains, repeat this capacitor discharge procedure.

**FIGURE D.1 — LOCATION OF INPUT FILTER CAPACITOR TERMINALS.**

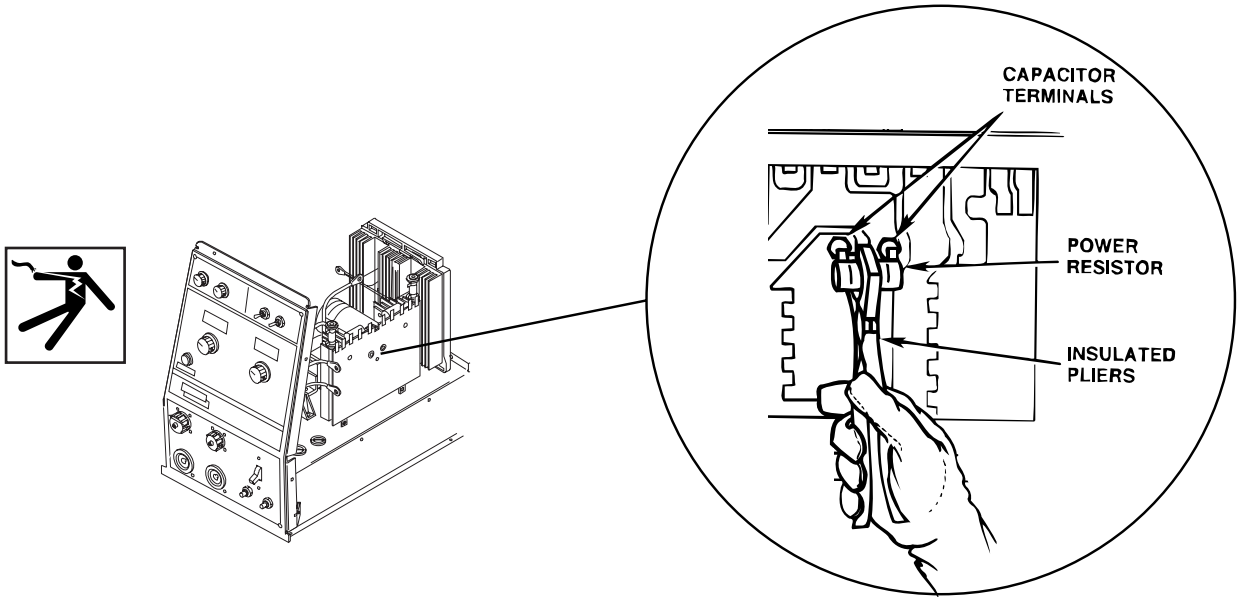

Return to Section TOC
Return to Master TOC

## PREVENTIVE MAINTENANCE

1. Perform the following preventive maintenance procedures at least once every six months. It is good practice to keep a preventive maintenance record; a record tag attached to the machine works best.

2. Remove the machine wraparound cover and perform the input filter capacitor discharge procedure (detailed at the beginning of this chapter).

3. Clean the inside of the machine with a low pressure airstream. Be sure to clean the following components thoroughly.

   - Power Switch, Driver, Protection, and Control printed circuit boards
   - Power Switch
   - Main Transformer
   - Input Rectifier
   - Heat Sink Fins
   - Input Filter Capacitors
   - Output Terminals
   - Lower base compartment

4. Examine capacitors for leakage or oozing. Replace if needed.

5. Examine wraparound cover for dents or breakage. Repair as needed. Cover must be kept in good condition to assure high voltage parts are protected and correct spacings are maintained.

6. Check electrical ground continuity. Using an ohmmeter, measure resistance between either output stud and an unpainted surface of the machine case. Meter reading should be 500,000 ohms or more. If meter reading is less than 500,000 ohms, check for electrical components that are not properly insulated from the case. Correct insulation if needed.

7. Replace machine cover and screws.

## FIGURE D.2 – MAJOR COMPONENT LOCATIONS

1. BASE ASSEMBLY
2. REAR NAMEPLATE
3. RESISTORS
4. FAN SHROUD ASSEMBLY
5. PROTECTION PC BOARD
6. DRIVER PC BOARD
7. CONTROL BOX
8. CONTROL PC BOARD
9. BLEEDER RESISTORS
10. RECONNECT PANEL
11. IGBT OR DARLINGTON MODULE
12. WRAPAROUND ASSEMBLY
13. CASE FRONT ASSEMBLY
14. OUTPUT TERMINALS
15. OUTPUT CHOKE ASSEMBLY
16. TRANSFORMER ASSEMBLY
17. OUTPUT RECTIFIER ASSEMBLY
18. AUXILIARY TRANSFORMER
19. FET HEAT SINK ASSEMBLY

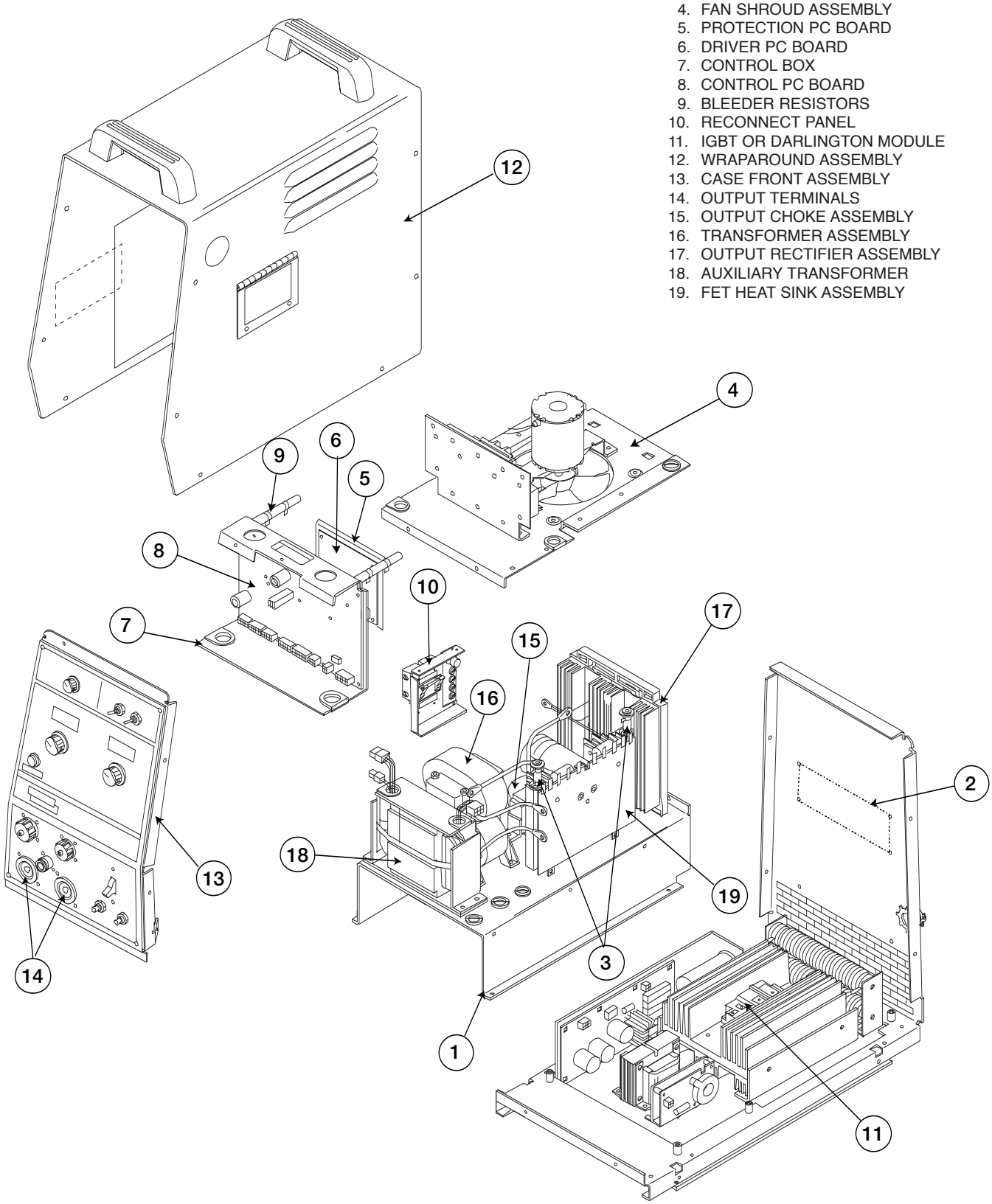




Return to Section TOC
Return to Master TOC

# TABLE OF CONTENTS
# -THEORY OF OPERATION SECTION-

**Theory of Operation** ..... **Section E**
General Description ..... E-2
Input Voltage ..... E-2
Reconnect, Protection Board, Rectification and Precharge ..... E-3
Switch Boards ..... E-4
Main Transformer, Output Rectification and Choke ..... E-5
Control Board, IGBT Drive and Module ..... E-6
Power Board ..... E-7
Remote Protection Board ..... E-7
Field Effect Transistor (FET) Operation ..... E-8
Pulse Width Modulation ..... E-9
Minimum Output ..... E-9
Maximum Output ..... E-9
Protective Circuits ..... E-10
Overload Protection ..... E-10
Thermal Protection ..... E-10

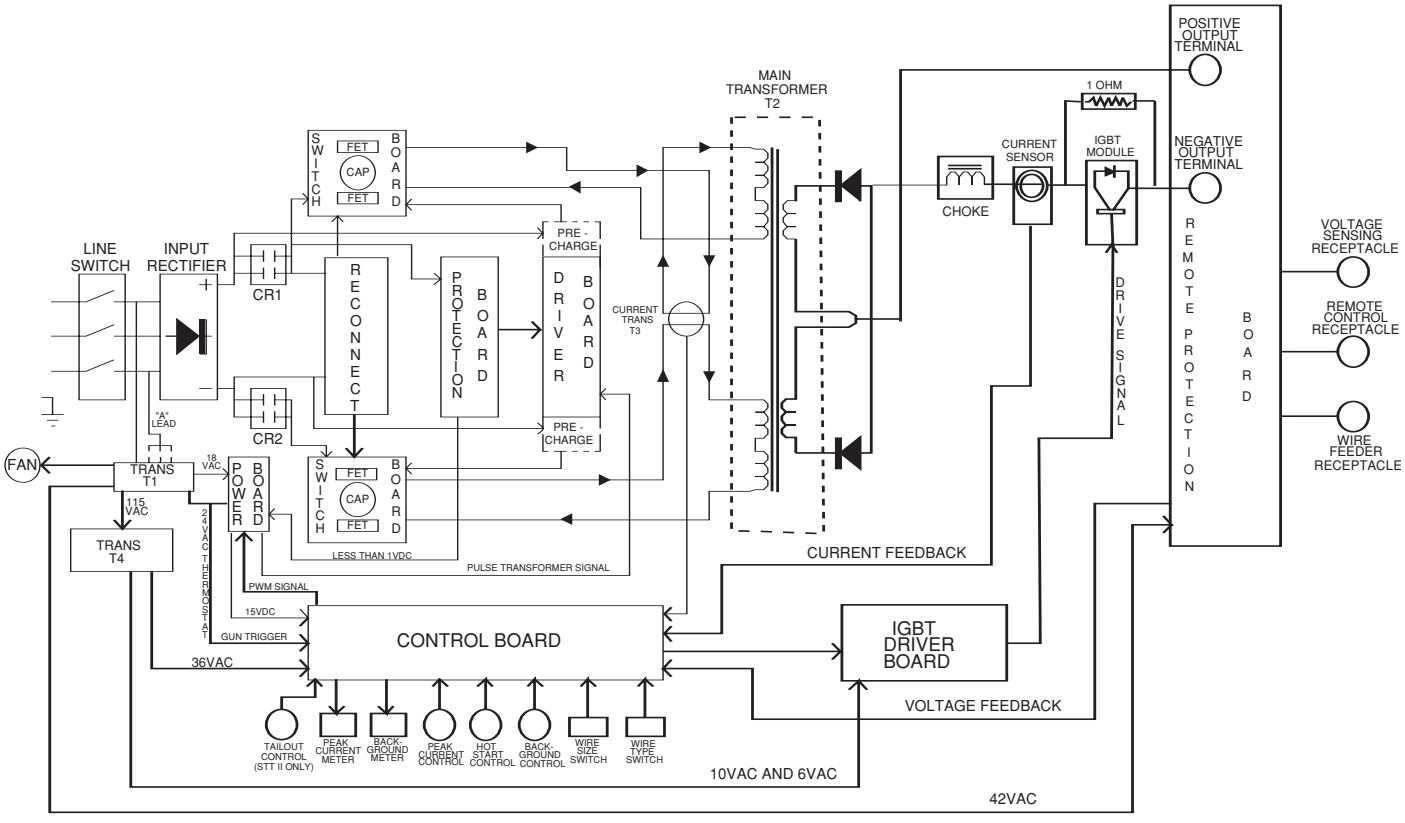


**FIGURE E.1 – INVERTEC STT**



Return to Master TOC
Return to Master TOC
Return to Master TOC
Return to Master TOC

# THEORY OF OPERATION

**FIGURE E.2 – INPUT VOLTAGE**

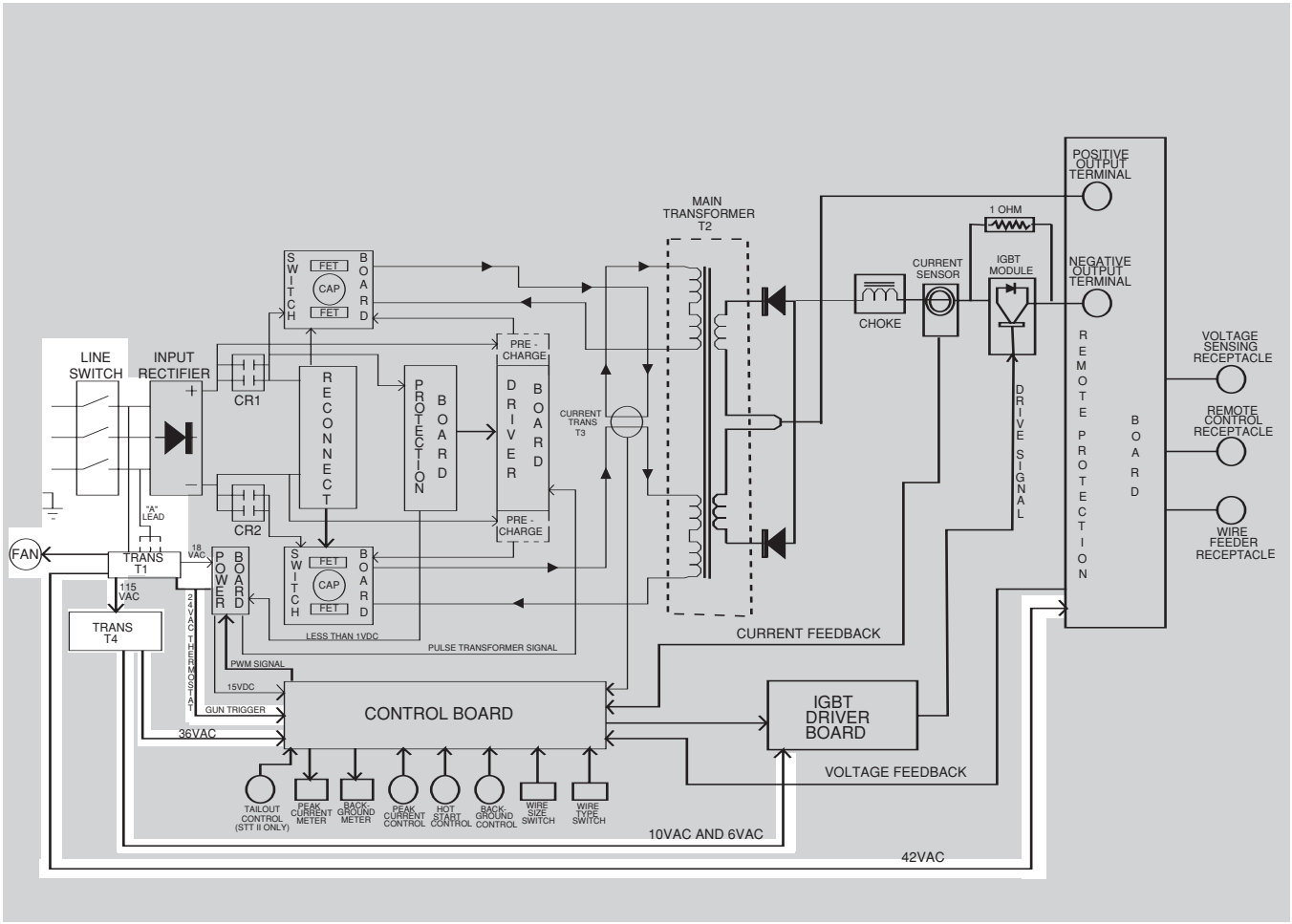


## GENERAL DESCRIPTION

The Invertec STT is a 225 ampere, inverter based, arc welding power supply specifically designed for the Surface Tension Transfer (STT) welding process. It cannot be classified as either a constant current (CC) or a constant voltage (CV) machine. The STT produces current of a desired waveform to reduce spatter and fumes. The STT process is optimized for short - circuit GMAW welding only.

## INPUT VOLTAGE

The Invertec STT can be connected for a variety of three-phase voltages. The initial input power is applied to the STT through a line switch located on the front of the machine. The AC input voltage is applied to the input rectifier and the T1 auxiliary transformer. The T1 transformer develops the appropriate AC voltages to operate the cooling fan, the power and control boards. The T1 transformer also supplies primary voltage to the T4 auxiliary transformer as well as 42 VAC to an external wire feeder. The T4 transformer supplies power to the IGBT drive board and the control board.

**NOTE:** Unshaded areas of Block Logic Diagram are the subject of discussion.



Return to Section TOC
Return to Master TOC
Return to Section TOC
Return to Master TOC
Return to Section TOC
Return to Master TOC
Return to Section TOC
Return to Master TOC

FIGURE E.3 – RECONNECT, PROTECTION BOARD, RECTIFICATION AND PRECHARGE

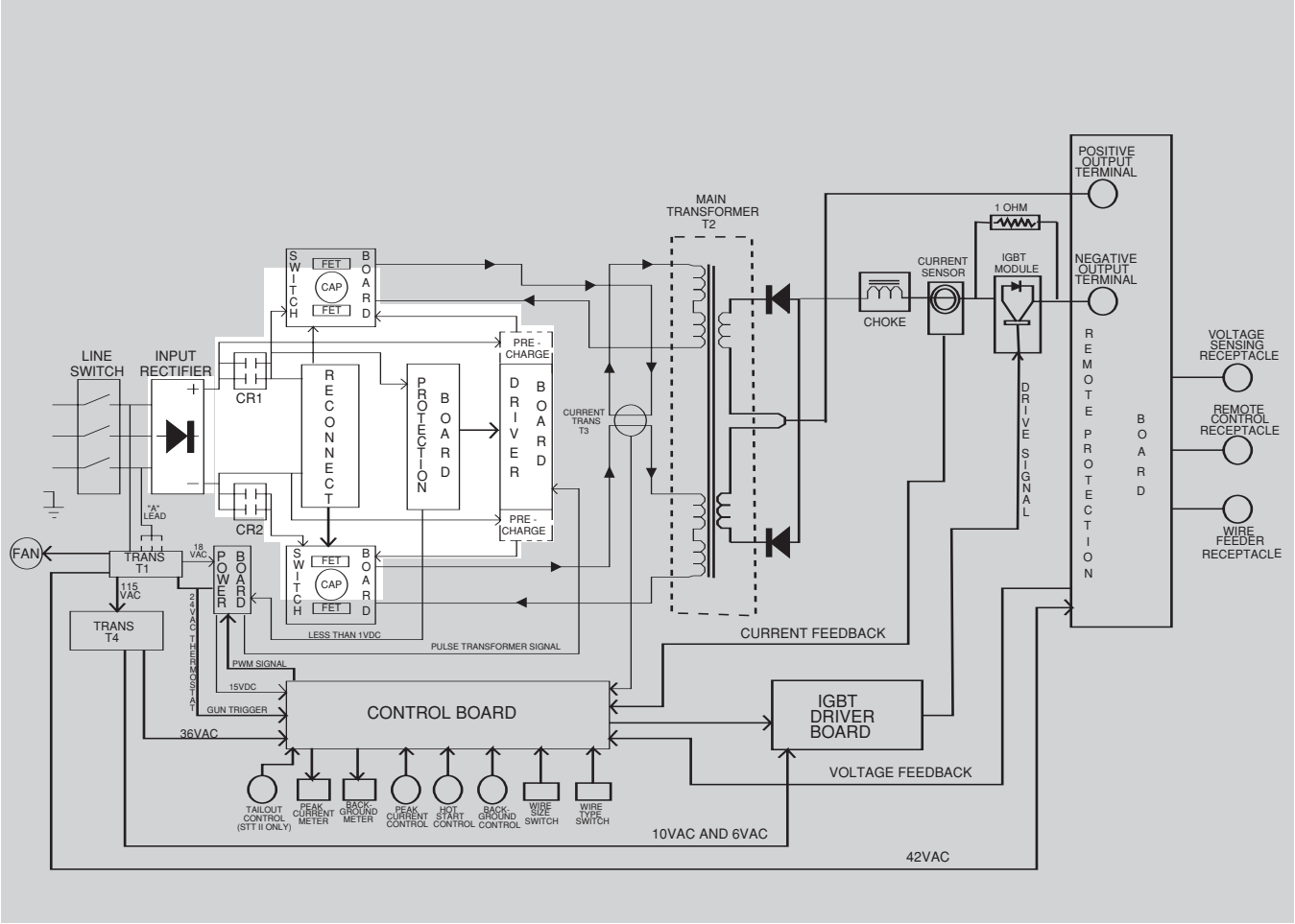


## RECONNECT, PROTECTION BOARD, RECTIFICATION AND PRECHARGE

The reconnect panel allows the user to switch to low or high input voltage to match the input line voltage. The AC input voltage is rectified and applied to the driver board. The driver board contains precharging circuitry for safe charging of the input filter capacitors. Once the capacitors are precharged, the input relays are energized, connecting full input power to the input filter capacitors. The protection board monitors the capacitors for voltage balance and/or overvoltage and will de-energize the input relays and precharge circuitry if either occurs. The machine output will be disabled.

**NOTE:** Unshaded areas of Block Logic Diagram are the subject of discussion.



Return to Section TOC
Return to Master TOC

# THEORY OF OPERATION

**FIGURE E.4 – SWITCH BOARDS**

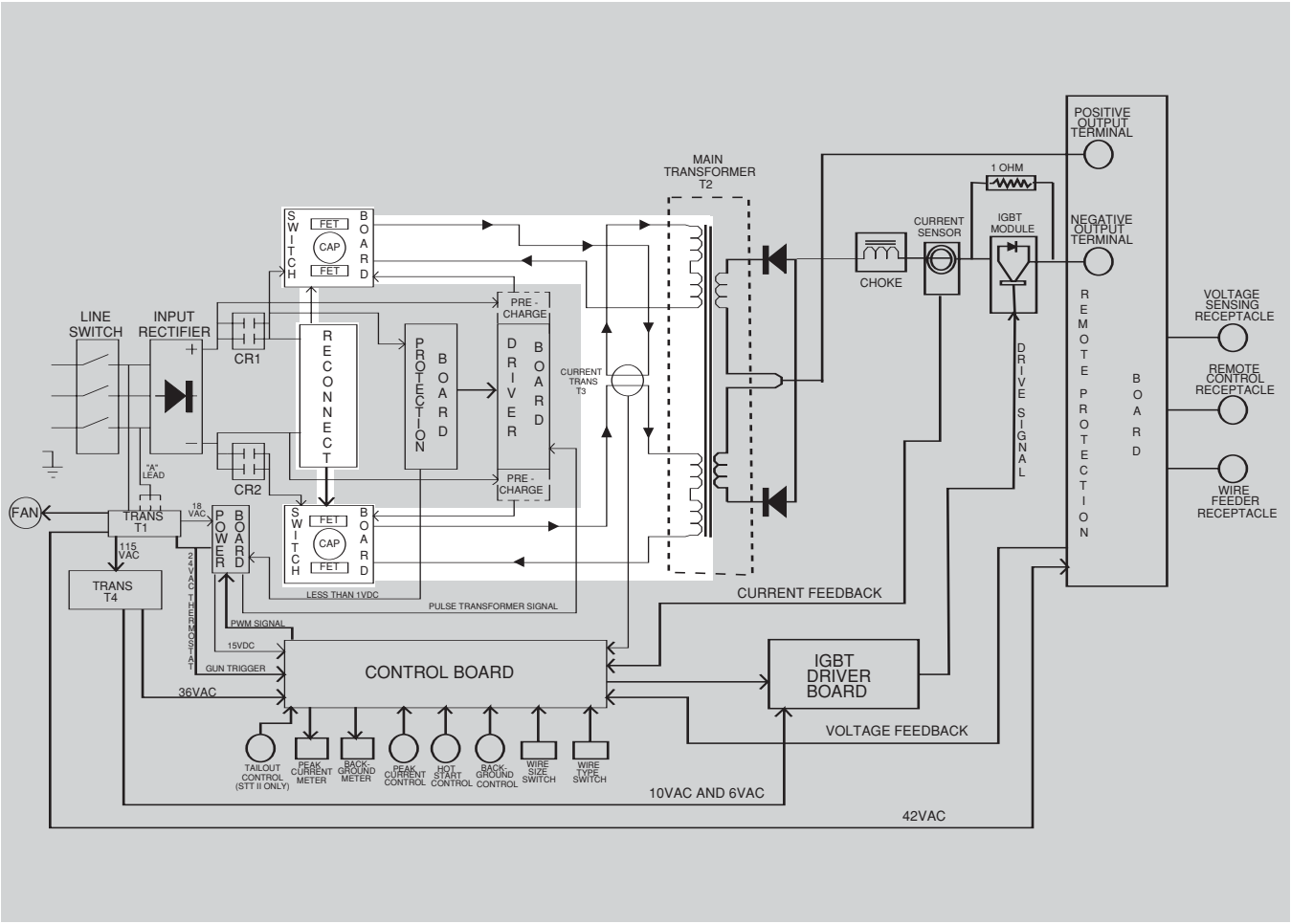


## SWITCH BOARDS

There are two switch boards in the Invertec STT, each containing an input filter capacitor. The capacitors are connected in parallel when the machine is connected for "low" input voltage. The capacitors are connected in series when the reconnect switch is configured for "high" input voltage. When the capacitors are fully charged, they act as power supplies for the switch boards. The switch boards contain the Field Effect Transistors (FETs) which, when switched on, supply the main transformer primary windings with DC current flow. See ***Field Effect Transistor (FET) Operation*** discussion and diagrams. See Figure E.4.

**NOTE:** Unshaded areas of Block Logic Diagram are the subject of discussion.



Return to Section TOC
Return to Master TOC
Return to Section TOC
Return to Master TOC
Return to Section TOC
Return to Master TOC
Return to Section TOC
Return to Master TOC

**FIGURE E.5 – MAIN TRANSFORMER, OUTPUT RECTIFICATION AND CHOKE**

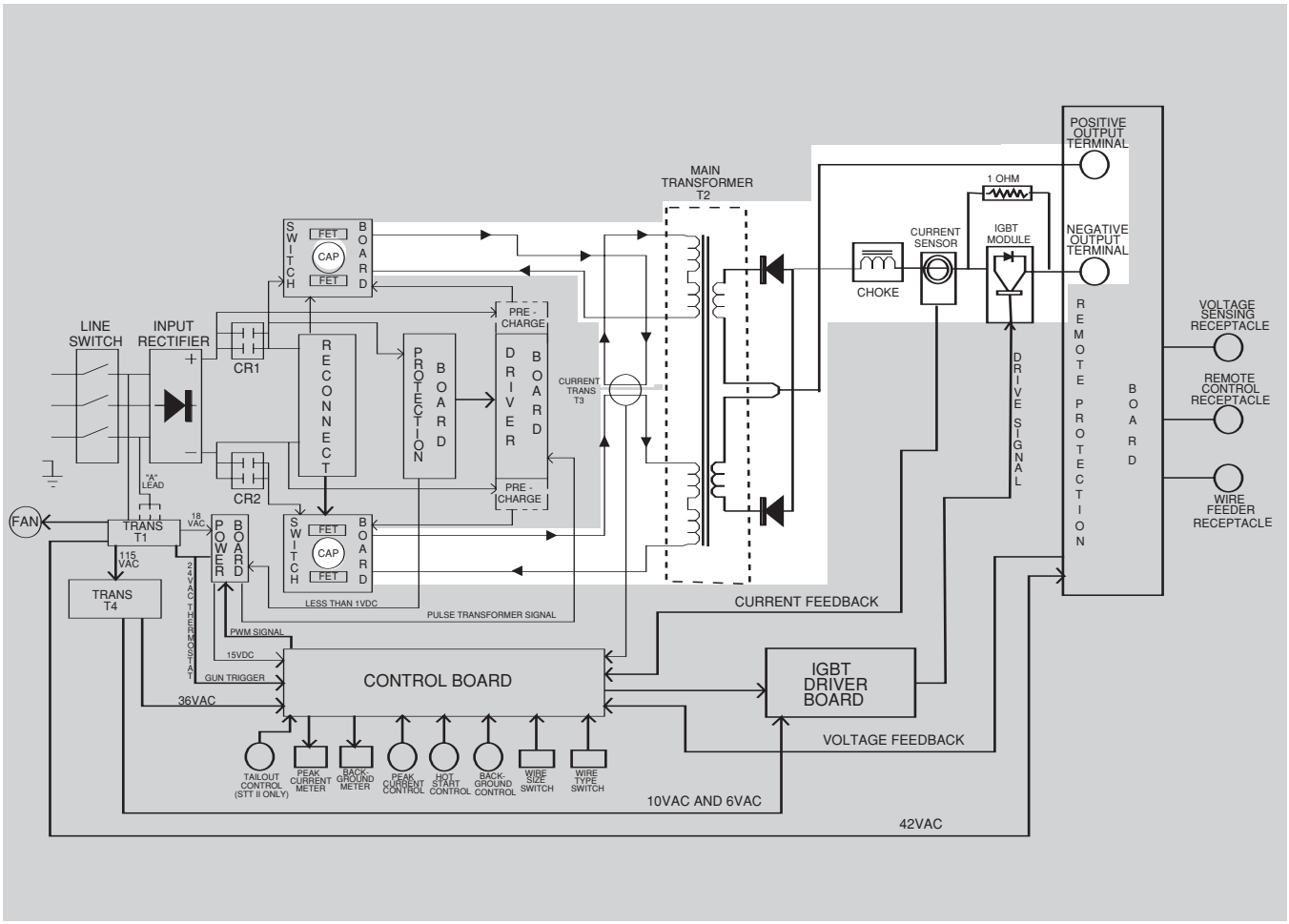


## MAIN TRANSFORMER, OUTPUT RECTIFICATION AND CHOKE

Each switch board works as a switch pair. Each board feeds a separate, oppositely wound primary winding of the main transformer. The opposite directions of current flow through the main transformer primary and the offset timing of the switch boards induce an AC square wave output signal at the secondary of the main transformer.

The DC current flow through each primary winding, which is monitored by the current transformer T3, is redirected or "clamped" back to each respective input capacitor when the FETs are turned off. This is needed due to the inductance of the transformer primary windings. The cross coupling of the primaries along with the clamping action of the diode maintain capacitor balance when they are connected in the series (high voltage) input configuration.

The firing of both switch board pairs occurs during halves of 50 microsecond intervals, creating a constant 20 KHZ output.

The AC output from the main transformer secondary is rectified to a DC output and is applied through a stabilizer output choke, current sensor, IGBT module and remote protection board to the output terminals.

**NOTE:** Unshaded areas of Block Logic Diagram are the subject of discussion.



Return to Section TOC
Return to Master TOC

# THEORY OF OPERATION

**FIGURE E.6 – CONTROL BOARD, IGBT DRIVE AND MODULE**

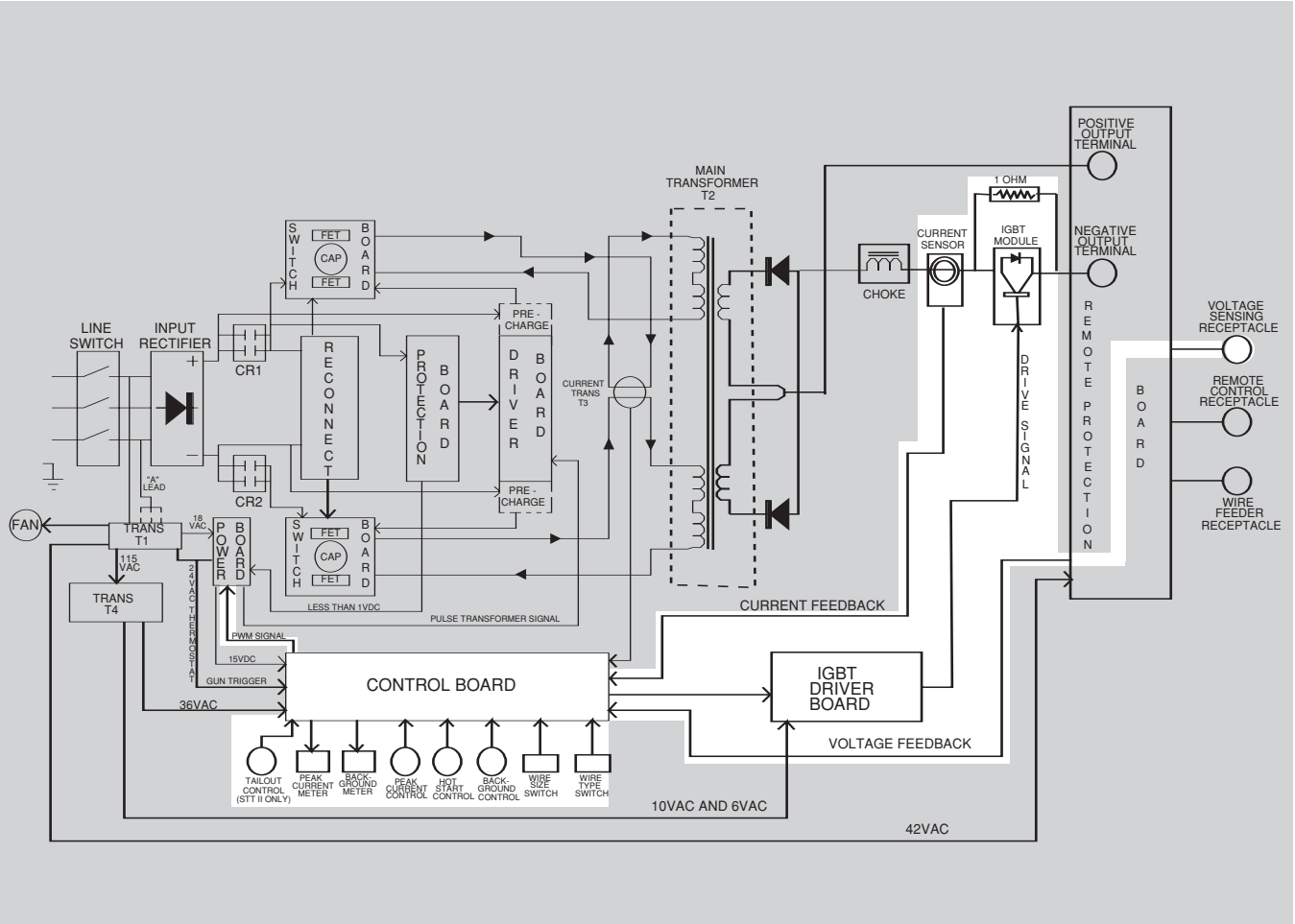


## CONTROL BOARD, IGBT DRIVE AND MODULE

The control board monitors the directives of the various controls and compares these commands to the current and voltage feedback information received from the current sensor and voltage sensing receptacle. This data is processed and the suitable PWM signal is sent to the power board. (See ***Pulse Width Modulation*** discussion).

The control board also determines when the IGBT module should be switched OFF to reduce weld spatter and fumes. The appropriate signal is sent to the IGBT drive board which then applies, or removes, the gate drive signal to the IGBT module. When the IGBT module is in the OFF state, the welding current must pass through the one ohm resistance. This reduces the current and, subsequently, spatter and fumes.

**NOTE:** Unshaded areas of Block Logic Diagram are the subject of discussion.



Return to Section TOC
Return to Master TOC

# THEORY OF OPERATION

**FIGURE E.7 – POWER BOARD AND REMOTE PROTECTION BOARD**

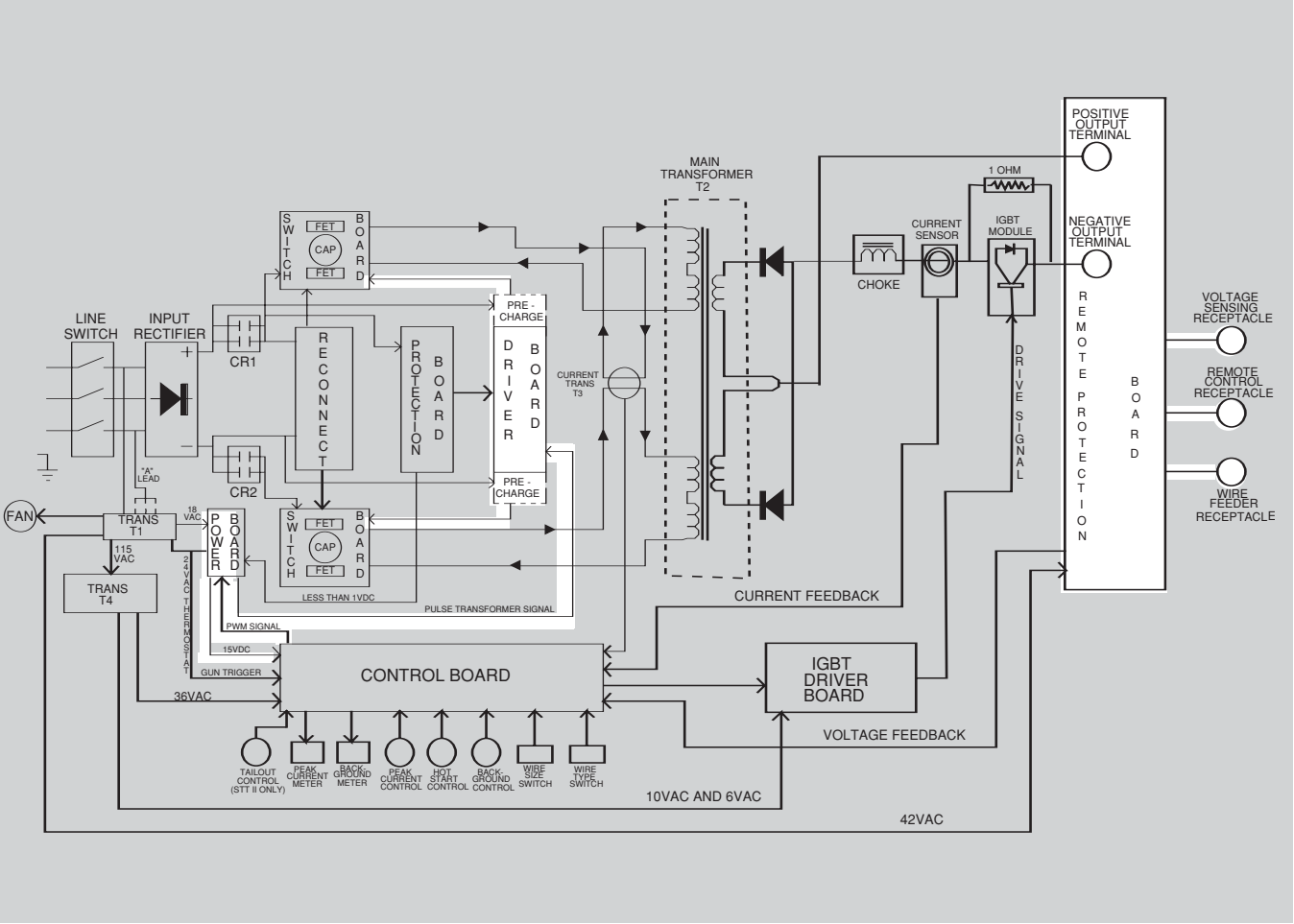


## POWER BOARD

The power board creates a pulse transformer drive signal, which is derived from the PWM signal received from the control board. See ***Pulse Width Modulation*** discussion. This drive signal is applied to the primary winding of the pulse transformer, which is located on the driver board. The pulse transformer secondary windings generate the proper gate pulse for the switch board FETs. See ***Field Effect Transistor (FET) Operation.***

The power board supplies a 15VDC supply voltage for the control board and also powers the input relays (CR1 and CR2).

## REMOTE PROTECTION BOARD

The remote protection board provides noise suppression and by-pass filtering to protect the internal circuitry of the STT machine.

**NOTE:** Unshaded areas of Block Logic Diagram are the subject of discussion.



Return to Section TOC
Return to Master TOC

FIGURE E-8 – FIELD EFFECT TRANSISTOR OPERATION

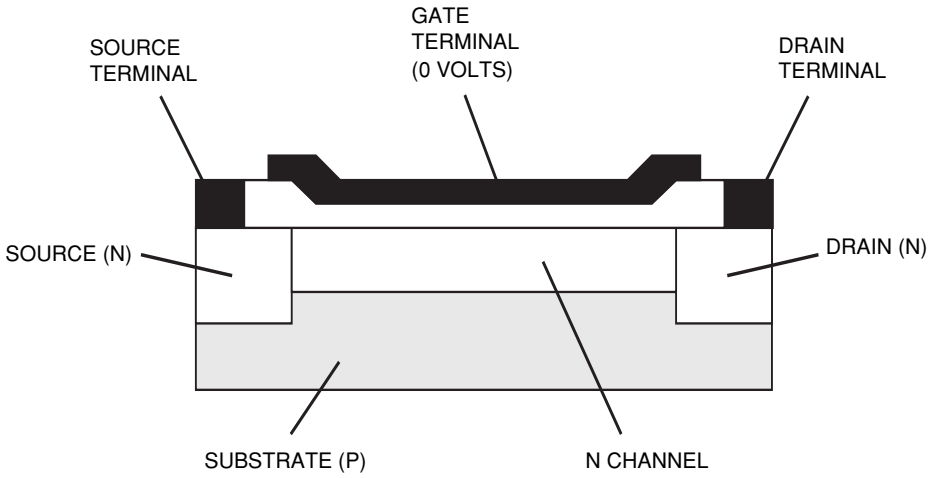


**A. PASSIVE**

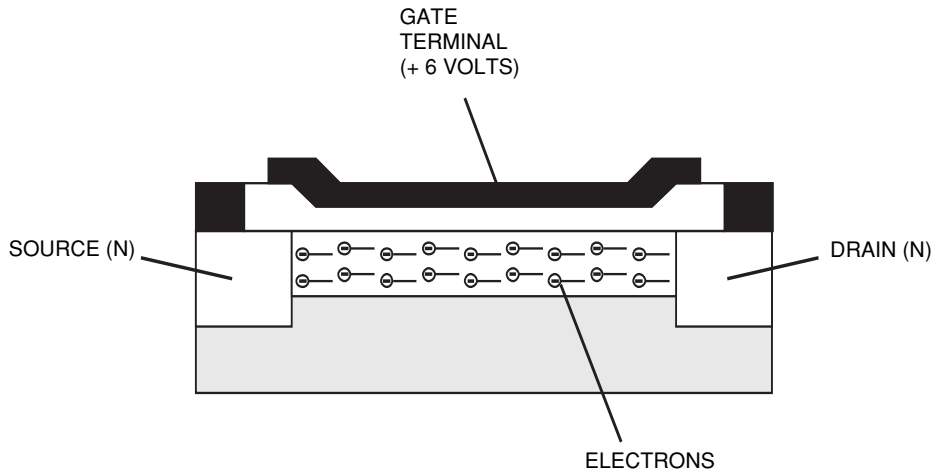


**B. ACTIVE**

## FIELD EFFECT TRANSISTOR (FET) OPERATION

An FET is a type of transistor. FETs are semiconductors well suited for high-frequency switching.

Drawing A above shows an FET in a passive mode. There is no gate signal, zero volts relative to the source and, therefore, no current flow. The drain terminal of the FET may be connected to a voltage supply; but since there is no conduction, the circuit will not supply current to downstream components connected to the source. The circuit is turned off like a light switch in the OFF position.

Drawing B above shows the FET in an active mode. When the gate signal, a positive DC voltage relative to the source, is applied to the gate terminal of the FET, it is capable of conducting current. A voltage supply connected to the drain terminal will allow the FET to conduct and henceforth supply current to downstream components. Current will flow through the conducting FET to downstream components as long as the gate signal is present. This is similar to turning on a light switch.



Return to Section TOC
Return to Master TOC

FIGURE E-9 – TYPICAL FET OUTPUTS

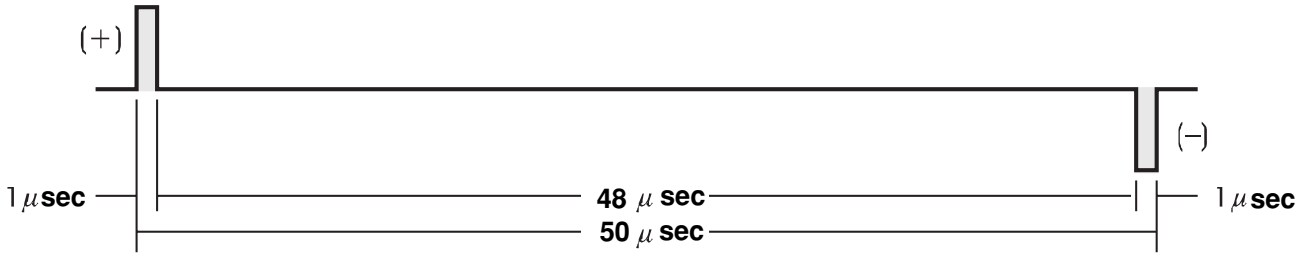


MINIMUM OUTPUT

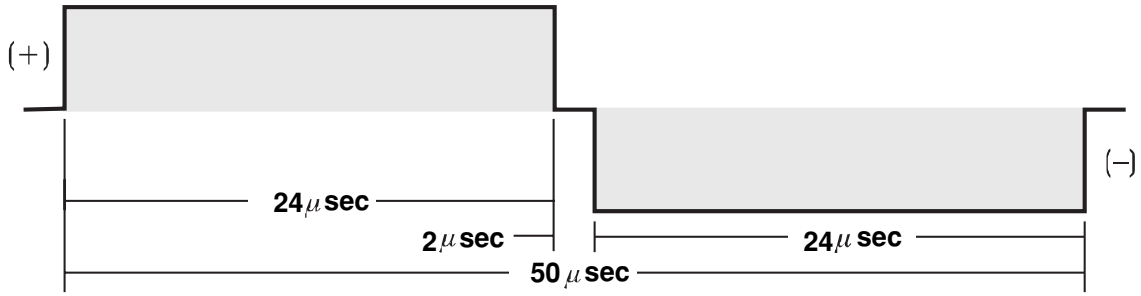


MAXIMUM OUTPUT

## PULSE WIDTH MODULATION

The term PULSE WIDTH MODULATION is used to describe how much time is devoted to conduction in the positive and negative portions of the cycle. Changing the pulse width is known as MODULATION. Pulse Width Modulation (PWM) is the varying of the pulse width over the allowed range of a cycle to affect the output of the machine.

### MINIMUM OUTPUT

By controlling the duration of the gate signal, the FET is turned on and off for different durations during a cycle. The top drawing above shows the minimum output signal possible over a 50-microsecond time period.

The positive portion of the signal represents one FET group[1] conducting for 1 microsecond. The negative portion is the other FET group[1]. The dwell time (off time) is 48 microseconds (both FET groups off). Since only 2 microseconds of the 50-microsecond time period is devoted to conducting, the output power is minimized.

### MAXIMUM OUTPUT

By holding the gate signals on for 24 microseconds each and allowing only 2 microseconds of dwell time (off time) during the 50-microsecond cycle, the output is maximized. The darkened area under the top curve can be compared to the area under the bottom curve. The more dark area under the curve, the more power is present.

[1] A FET group consists of the sets of FET modules grouped onto one switch board.



Return to Section TOC
Return to Master TOC
Return to Section TOC
Return to Master TOC
Return to Section TOC
Return to Master TOC
Return to Section TOC
Return to Master TOC

# THEORY OF OPERATION

## PROTECTIVE CIRCUITS

Protective circuits are designed into the Invertec machine to sense trouble and shut down the machine before the trouble damages the internal machine components. Both overload and thermal protection circuits are included.

## OVERLOAD PROTECTION

The machine is electrically protected from producing abnormally high output currents due to short electrode "stick-out" or the nozzle shorting to the work. Should the output current exceed 500 amps, an electronic protection circuit will reduce the current to zero amps. Five seconds after the "short" is removed the Invertec STT will produce normal output.

A protection circuit is included to monitor the voltage across input filter capacitors. In the event that the capacitor voltage is too high, the protection circuit will prevent output. The protection circuit may prevent output, if any of these circumstances occur:

1. Capacitor conditioning is required
   (Required if machine has been off for prolonged periods of time.)
2. Line surges over 500 VAC
3. Internal Component damage
4. Improper connections

## THERMAL PROTECTION

Thermostats protect the machine from excessive operating temperatures. Excessive temperatures may be caused by a lack of cooling air or operating the machine beyond the duty cycle and output rating. If excessive operating temperature should occur, the thermostat will prevent output voltage or current. The meter will remain on during this time. (In addition, the yellow thermo LED will light.)

Thermostats are self-resetting once the machine cools sufficiently. If the thermostat shutdown was caused by excessive output or duty cycle and the fan is operating normally, the Power Switch may be left on and the reset should occur within a 15-minute period. If the fan is not turning or the air intake louvers were obstructed, then the power must be switched off for 15 minutes in order to reset. The fan problem or air obstruction must also be corrected.



Return to Section TOC
Return to Master TOC
Return to Section TOC
Return to Master TOC
Return to Section TOC
Return to Master TOC
Return to Section TOC
Return to Master TOC

# TABLE OF CONTENTS
# TROUBLESHOOTING & REPAIR SECTION

**Troubleshooting & Repair Section** ..... **Section F**

How to Use Troubleshooting Guide ..... F-2

PC Board Troubleshooting Procedures ..... F-3

Troubleshooting Guide ..... F4 - F-12

Test Procedures ..... F-13
- T1 Auxiliary Transformer Test ..... F-13
- T4 Auxiliary Transformer Test ..... F-19
- Input Rectifier Test ..... F-25
- Capacitor Balance Test ..... F-29
- Switch Board Test ..... F-33
- Snubber Resistors Test ..... F-37
- Power Board Test ..... F-41
- Protection Board Test ..... F-45
- Trigger Circuit Test ..... F-49

Replacement Procedures ..... F-53
- IGBT Module Removal and Replacement ..... F-53
- Switch Board Replacement ..... F-59
- Capacitor Removal and Replacement Procedure ..... F-65
- Output Rectifier Removal and Replacement ..... F-73

Retest After Repair ..... F-77

Return to Master TOC
Return to Master TOC
Return to Master TOC
Return to Master TOC

# TROUBLESHOOTING & REPAIR

## HOW TO USE TROUBLESHOOTING GUIDE

**⚠ WARNING**

Service and repair should be performed by only Lincoln Electric Factory Trained Personnel. Unauthorized repairs performed on this equipment may result in danger to the technician and machine operator and will invalidate your factory warranty. For your safety and to avoid Electrical Shock, please observe all safety notes and precautions detailed throughout this manual.

This Troubleshooting Guide is provided to help you locate and repair possible machine malfunctions. Simply follow the three-step procedure listed below.

**Step 1. LOCATE PROBLEM (SYMPTOM)**. Look under the column labeled "PROBLEM (SYMPTOMS). This column describes possible symptoms that the machine may exhibit. Find the listing that best describes the symptom that the machine is exhibiting. Symptoms are grouped into two main categories: Output Problems, and Welding Problems.

**Step 2. PERFORM EXTERNAL TESTS.** The second column, labeled "POSSIBLE AREAS OF MISADJUSTMENT(S)", lists the obvious external possibilities that may contribute to the machine symptom. Perform these tests/checks in the order listed. In general, these tests can be conducted without removing the case wrap-around cover.

**Step 3. PERFORM COMPONENT TESTS**. The last column, labeled "Recommended Course of Action" lists the most likely components that may have failed in your machine. It also specifies the appropriate test procedure to verify that the subject component is either good or bad. If there are a number of possible components, check the components in the order listed to eliminate one possibility at a time until you locate the cause of your problem.

All of the referenced test procedures referred to in the Troubleshooting Guide are described in detail at the end of this chapter. Refer to the Troubleshooting and Repair Table of Contents to locate each specific Test Procedure. All of the referred to test points, components, terminal strips, etc., can be found on the referenced electrical wiring diagrams and schematics. Refer to the ***Electrical Diagrams Section Table of Contents*** to locate the appropriate diagram.

### OSCILLOSCOPE WARNING

**⚠ WARNING**

Do not use oscilloscopes and other test equipment which are powered by 115 VAC. This equipment should not be used with inverter-type machines, such as Invertec STT. There are high voltages present, which are "floating" off case ground (floating ground). Connecting the ground lead of a test probe (which may be connected to the case of the test equipment) to a high voltage potential presents a shock hazard as well as the possibility of damage to the equipment in question.

**⚠ CAUTION**

If for any reason you do not understand the test procedures or are unable to perform the test/repairs safely, contact the Lincoln Electric Service Department for electrical troubleshooting assistance before you proceed. Call1-888-935-3877.



Return to Section TOC
Return to Master TOC
Return to Section TOC
Return to Master TOC
Return to Section TOC
Return to Master TOC
Return to Section TOC
Return to Master TOC

Return to Section TOC
Return to Master TOC
Return to Section TOC
Return to Master TOC
Return to Section TOC
Return to Master TOC
Return to Section TOC
Return to Master TOC

## PC BOARD TROUBLESHOOTING PROCEDURES

**⚠ WARNING**

**ELECTRIC SHOCK can kill.**

Have an electrician install and service this equipment. Turn the machine OFF before working on equipment. Do not touch electrically hot parts.

Sometimes machine failures appear to be due to PC board failures. These problems can sometimes be traced to poor electrical connections. To avoid problems when troubleshooting and replacing PC boards, please use the following procedure:

1. Determine to the best of your technical ability that the PC board is the most likely component causing the failure symptom.
2. Check for loose connections at the PC board to assure that the PC board is properly connected.
3. If the problem persists, replace the suspect PC board using standard practices to avoid static electrical damage and electrical shock. Read the warning inside the static resistant bag and perform the following procedures:

**ATTENTION**
**Static-Sensitive Devices**
**Handle only at Static-Safe Workstations**

**Reusable Container**
**Do Not Destroy**

**PC Board can be damaged by static electricity.**

- Remove your body's static charge before opening the static-shielding bag. Wear an anti-static wrist strap. For safety, use a 1 Meg ohm resistive cord connected to a grounded part of the equipment frame.
- If you don't have a wrist strap, touch an unpainted, grounded, part of the equipment frame. Keep touching the frame to prevent static build-up. Be sure not to touch any electrically live parts at the same time.
- Tools which come in contact with the PC Board must be either conductive, anti-static or static-dissipative.
- Remove the PC Board from the static-shielding bag and place it directly into the equipment. Don't set the PC Board on or near paper, plastic or cloth which could have a static charge. If the PC Board can't be installed immediately, put it back in the static-shielding bag.
- If the PC Board uses protective shorting jumpers, don't remove them until installation is complete.
- If you return a PC Board to The Lincoln Electric Company for credit, it must be in the static-shielding bag. This will prevent further damage and allow proper failure analysis.

4. Test the machine to determine if the failure symptom has been corrected by the replacement PC board.

**NOTE:** Allow the machine to heat up so that all electrical components can reach their operating temperature.

5. Remove the replacement PC board and substitute it with the original PC board to recreate the original problem.
   a. If the original problem does not reappear by substituting the original board, then the PC board was not the problem. Continue to look for bad connections in the control wiring harness, junction blocks, and terminal strips.
   b. If the original problem is recreated by the substitution of the original board, then the PC board was the problem. Reinstall the replacement PC board and test the machine.
6. Always indicate that this procedure was followed when warranty reports are to be submitted.

**NOTE:** Following this procedure and writing on the warranty report, "INSTALLED AND SWITCHED PC BOARDS TO VERIFY PROBLEM," will help avoid denial of legitimate PC board warranty claims.

# TROUBLESHOOTING & REPAIR

**Observe Safety Guidelines detailed in the beginning of this manual.**

## TROUBLESHOOTING GUIDE

| PROBLEMS (SYMPTOMS) | POSSIBLE AREAS OF MISADJUSTMENT(S) | RECOMMENDED COURSE OF ACTION |
|---|---|---|
| **OUTPUT PROBLEMS** | | |
| Major physical or electrical damage is evident. | 1. Contact your local **Lincoln Authorized Field Service Facility.** | 1. Contact the Lincoln Electric Service Department, 1-888-935-3877. |
| Machine has no open circuit voltage. Wire feeds OK. | 1. Check the control cable between the feeder and the STT unit. Make sure the #2 and #4 leads are intact.<br>2. Put a jumper wire between Pins "C" and "D" on the 14 pin amphenol. If normal open circuit voltage (85VDC) is restored, the problem is in the feeder control cable or the wire feeder.<br>3. Make sure the reconnect switch S7 is in the correct position for the three-phase input voltage being applied.<br>**⚠ CAUTION**<br>Do not switch reconnect switch with input power applied to machine. | 1. Perform the ***T1 Auxiliary Transformer Test.***<br>2. Perform the ***T4 Auxiliary Transformer Test.***<br>3. Perform the ***Power Board Test.***<br>4. Perform the ***Trigger Circuit Test.***<br>5. Perform ***Capacitor Balance Test.***<br>6. Perform the ***Protection Board Test.***<br>7. Perform the ***Switch Board Test.***<br>8. Check for loose or broken connections on the heavy current carrying conductors (i.e., main transformer, choke, output diodes, IGBT module and output terminals).<br>9. The control PC board may be faulty. Replace. |

**⚠ CAUTION**

If for any reason you do not understand the test procedures or are unable to perform the test/repairs safely, contact the Lincoln Electric Service Department for electrical troubleshooting assistance before you proceed. Call 1-888-935-3877.



Return to Section TOC
Return to Master TOC

# TROUBLESHOOTING & REPAIR

## TROUBLESHOOTING GUIDE

**Observe Safety Guidelines detailed in the beginning of this manual.**

| PROBLEMS (SYMPTOMS) | POSSIBLE AREAS OF MISADJUSTMENT(S) | RECOMMENDED COURSE OF ACTION |
|---|---|---|
| **OUTPUT PROBLEMS** | | |
| Machine has no welding output (no open circuit voltage), and the wire feeder does not feed wire when the gun trigger is pulled. | 1. The 42VAC circuit breaker CB1 may be tripped. Reset if necessary.<br>2. Check the 4 amp slow blow fuse located on the reconnect panel. Replace if faulty.<br>3. Put a jumper between pins "A" and "C" on the 5 pin amphenol located on the LN-742 wire feeder. If wire feeds, check the gun trigger. Repair or replace if necessary.<br>4. Check for the presence of 42VAC at pins "K" and "I" on the 14 pin amphenol. If the 42VAC is present and the feeder does not work, the problem is in the feeder control cable or the wire feeder. | 1. If 42VAC is NOT present at pins "K" and "I" on the 14 pin amphenol, perform the ***T1 Auxiliary Transformer Test.***<br>2. Check leads #43 and #212C for loose or faulty connections between the T1 auxiliary transformer and the remote protection board. See the Wiring Diagram. Also check the continuity through the remote protection board to the 14 pin amphenol. See the Remote Protection Board Schematic. |

**⚠ CAUTION**

If for any reason you do not understand the test procedures or are unable to perform the test/repairs safely, contact the Lincoln Electric Service Department for electrical troubleshooting assistance before you proceed. Call 1-888-935-3877.



Return to Section TOC Return to Master TOC Return to Section TOC Return to Master TOC Return to Section TOC Return to Master TOC Return to Section TOC Return to Master TOC

# TROUBLESHOOTING & REPAIR

**Observe Safety Guidelines detailed in the beginning of this manual.**

## TROUBLESHOOTING GUIDE

| PROBLEMS (SYMPTOMS) | POSSIBLE AREAS OF MISADJUSTMENT(S) | RECOMMENDED COURSE OF ACTION |
|---|---|---|
| **OUTPUT PROBLEMS** | | |
| Machine is dead - no output - no fan - no display. | 1. The power switch must be in the "ON" position.<br>2. Check the input voltage. Make sure all three phases are applied to the machine.<br>3. With input power removed, check that the input voltage set-up switch and jumper "A" (the reconnect auxiliary jumper) are in the proper position for the input voltage being used.<br>4. With input power removed, check the continuity of the 4 amp slow blow fuse located on the reconnect panel. | 1. The input power switch (S1) may be faulty. Check or replace.<br>2. Perform the ***T1 Auxiliary Transformer Test.*** |
| No output or reduced output the first time power is applied to the machine. | 1. Check input voltages, fuses and input voltage reconnect procedures. See the ***Installation*** section.<br>2. If high input voltage (380VAC or higher) is applied, the capacitors may need conditioning. Let the "unloaded" machine idle for 30 minutes. | 1. Contact the Lincoln Electric Service Department. 1-888-935-3877. |

**⚠ CAUTION**

If for any reason you do not understand the test procedures or are unable to perform the test/repairs safely, contact the Lincoln Electric Service Department for electrical troubleshooting assistance before you proceed. Call 1-888-935-3877.



Return to Section TOC
Return to Master TOC
Return to Section TOC
Return to Master TOC
Return to Section TOC
Return to Master TOC
Return to Section TOC
Return to Master TOC

# TROUBLESHOOTING & REPAIR

## TROUBLESHOOTING GUIDE

**Observe Safety Guidelines detailed in the beginning of this manual.**

| PROBLEMS (SYMPTOMS) | POSSIBLE AREAS OF MISADJUSTMENT(S) | RECOMMENDED COURSE OF ACTION |
|---|---|---|
| **OUTPUT PROBLEMS** | | |
| No output. Main fuses are open, indicating excessive current draw. | 1. With the input power removed, inspect input leads for possible shorts or grounds or misconnections.<br>2. Install new fuses and reapply power. If fuses open again, contact your local Lincoln Authorized Field Service Facility. | 1. Check the input power switch (S1) and the reconnect switch for "shorted" or "grounded" wires or connections.<br>2. Perform the ***Input Rectifier Test.***<br>3. Perform the ***Switch Board Test.*** |
| Machine loses output when gun trigger is pulled or arc is struck. Machine output returns after a few seconds and trigger is pulled again. The thermal indicator light is lit. | 1. The overcurrent sensor is activated, indicating that too much output current is being drawn from the machine. Reduce welding current demands or remove the "fault" in welding cables.<br>2. Make sure that the gun tip is not "shorted" to the work surface and that the proper welding procedures are being used. | 1. The current sensor may be faulty.<br>2. The control PC board may be faulty. |

**⚠ CAUTION**

If for any reason you do not understand the test procedures or are unable to perform the test/repairs safely, contact the Lincoln Electric Service Department for electrical troubleshooting assistance before you proceed. Call 1-888-935-3877.



Return to Section TOC
Return to Master TOC
Return to Section TOC
Return to Master TOC
Return to Section TOC
Return to Master TOC
Return to Section TOC
Return to Master TOC

# TROUBLESHOOTING & REPAIR

## TROUBLESHOOTING GUIDE

**Observe Safety Guidelines detailed in the beginning of this manual.**

| PROBLEMS (SYMPTOMS) | POSSIBLE AREAS OF MISADJUSTMENT(S) | RECOMMENDED COURSE OF ACTION |
|---|---|---|
| **OUTPUT PROBLEMS** | | |
| Machine loses output while welding. The thermal indicator light is lit. Normal welding output returns after about 10 minutes. | 1. Check to make sure the fan is running and operating correctly.<br>2. Welding application may exceed recommended duty cycle.<br>3. Dirt and dust may have clogged the cooling channels. Blow out the unit with clean, dry compressed air.<br>4. Air intake and exhaust louvers may be blocked due to inadequate clearance around the machine. | 1. The IGBT heat sink thermostat or fan thermostat may be defective. Check or replace. |

**⚠ CAUTION**

If for any reason you do not understand the test procedures or are unable to perform the test/repairs safely, contact the Lincoln Electric Service Department for electrical troubleshooting assistance before you proceed. Call 1-888-935-3877.



Return to Section TOC
Return to Master TOC
Return to Section TOC
Return to Master TOC
Return to Section TOC
Return to Master TOC
Return to Section TOC
Return to Master TOC

# TROUBLESHOOTING & REPAIR

**Observe Safety Guidelines detailed in the beginning of this manual.**

## TROUBLESHOOTING GUIDE

| PROBLEMS (SYMPTOMS) | POSSIBLE AREAS OF MISADJUSTMENT(S) | RECOMMENDED COURSE OF ACTION |
|---|---|---|
| **WELDING PROBLEMS** | | |
| Porosity in the weld. | 1. Make sure the gas type and flow rate is correct for the procedure being used. Shield the work from excessive outside air currents.<br>2. Check the gun and nozzle for leaks or obstructions.<br>3. Make certain the machine and wire feed settings are correct for the process. | 1. Contact the Lincoln Electric Service Department. 1-888-935-3877. |

**⚠ CAUTION**

If for any reason you do not understand the test procedures or are unable to perform the test/repairs safely, contact the Lincoln Electric Service Department for electrical troubleshooting assistance before you proceed. Call 1-888-935-3877.



Return to Section TOC
Return to Master TOC
Return to Section TOC
Return to Master TOC
Return to Section TOC
Return to Master TOC
Return to Section TOC
Return to Master TOC

# TROUBLESHOOTING & REPAIR

## TROUBLESHOOTING GUIDE

**Observe Safety Guidelines detailed in the beginning of this manual.**

| PROBLEMS (SYMPTOMS) | POSSIBLE AREAS OF MISADJUSTMENT(S) | RECOMMENDED COURSE OF ACTION |
|---|---|---|
| **WELDING PROBLEMS** | | |
| Weld bead appears "cold." | 1. One or more of the machine settings may be wrong. Check the Background, Peak Current, Tailout (STT II Only), and Wire Speed controls for proper settings. Adjust for optimum welding performance.<br>2. Make sure the Wire Type and Wire Size switches are in the correct position for the electrode wire being used. | 1. Check for the correct open circuit voltage (approximately 85VDC). If the correct open circuit voltage IS present, the Background control (R12) or the Peak Current (R11) and associated wiring may be faulty. See the Wiring Diagram. The control PC board may be faulty. Also check for loose or faulty connections on the heavy current carrying conductors (i.e., main transformer, choke, output diodes, IGBT module and output terminals).<br>2. If the correct open circuit voltage is NOT present, perform the ***Switch Board Test.***<br>3. The output diodes may be faulty. Check or replace if necessary.<br>4. The driver PC board and or control PC board may be faulty.<br>5. The IGBT module may be faulty. Check or replace. |

**⚠ CAUTION**

If for any reason you do not understand the test procedures or are unable to perform the test/repairs safely, contact the Lincoln Electric Service Department for electrical troubleshooting assistance before you proceed. Call 1-888-935-3877.



Return to Section TOC
Return to Master TOC
Return to Section TOC
Return to Master TOC
Return to Section TOC
Return to Master TOC
Return to Section TOC
Return to Master TOC

# TROUBLESHOOTING & REPAIR

**Observe Safety Guidelines detailed in the beginning of this manual.**

## TROUBLESHOOTING GUIDE

| PROBLEMS (SYMPTOMS) | POSSIBLE AREAS OF MISADJUSTMENT(S) | RECOMMENDED COURSE OF ACTION |
|---|---|---|
| **WELDING PROBLEMS** | | |
| Molten weld puddle appears excessively "violent." | 1. The Wire Type switch may be in the wrong position for the electrode wire being used.<br>2. The Peak Current or Background Setting may be too high. Adjust for optimum welding performance.<br>3. The Tailout may not be set correctly for the process. (STT II Only) | 1. The IGBT module may be faulty. Check or replace.<br>2. The IGBT driver PC board may be faulty.<br>3. The control PC board may be faulty. |

**⚠ CAUTION**

If for any reason you do not understand the test procedures or are unable to perform the test/repairs safely, contact the Lincoln Electric Service Department for electrical troubleshooting assistance before you proceed. Call 1-888-935-3877.



Return to Section TOC
Return to Master TOC
Return to Section TOC
Return to Master TOC
Return to Section TOC
Return to Master TOC
Return to Section TOC
Return to Master TOC

# TROUBLESHOOTING & REPAIR

## TROUBLESHOOTING GUIDE

**Observe Safety Guidelines detailed in the beginning of this manual.**

| PROBLEMS (SYMPTOMS) | POSSIBLE AREAS OF MISADJUSTMENT(S) | RECOMMENDED COURSE OF ACTION |
|---|---|---|
| **WELDING PROBLEMS** | | |
| Excessive weld spatter. Arc sounds and looks like a standard MIG process. | 1. Check the Arc Sense leads for loose or faulty connections.<br>2. Make sure the Arc Sense "WORK" lead is as close as possible to the welding arc.<br>3. Make sure the machine and wire feed settings are correct for the process and wire being used. | 1. The IGBT module may be faulty. Check or replace.<br>2. The IGBT driver PC board may be faulty.<br>3. The control PC board may be faulty. |
| Poor welding, weld settings drift, or output power is low. | 1. Make sure the machine settings are correct for the welding process being used.<br>2. Check the welding cables for loose or faulty connections.<br>3. Make sure the reconnect switch S7 is in the correct position for the three-phase input voltage being applied.<br>**⚠ CAUTION**<br>Do not switch reconnect switch with input power applied to machine. | 1. The current sensor may be faulty. Check associated leads for loose or faulty connections.<br>2. The control PC board may be faulty. |

**⚠ CAUTION**

If for any reason you do not understand the test procedures or are unable to perform the test/repairs safely, contact the Lincoln Electric Service Department for electrical troubleshooting assistance before you proceed. Call 1-888-935-3877.



Return to Section TOC
Return to Master TOC
Return to Section TOC
Return to Master TOC
Return to Section TOC
Return to Master TOC
Return to Section TOC
Return to Master TOC

# T1 AUXILIARY TRANSFORMER TEST

**⚠ WARNING**

Service and repair should be performed by only Lincoln Electric factory trained personnel. Unauthorized repairs performed on this equipment may result in danger to the technician or machine operator and will invalidate your factory warranty. For your safety and to avoid electrical shock, please observe all safety notes and precautions detailed throughout this manual.

If for any reason you do not understand the test procedures or are unable to perform the test/repairs safely, contact the Lincoln Electric Service Department for electrical troubleshooting assistance before you proceed. Call 1-888-935-3877

## TEST DESCRIPTION

This test will determine if the correct voltages are being:

a. applied to the primary of the T1 auxiliary transformer.

b. induced upon the secondary windings of the T1 auxiliary transformer.

## MATERIALS NEEDED

Volt/Ohmmeter (Multimeter)
Invertec STT wiring diagrams
5/16" Nut driver
3/8" Wrench
Slot head screw driver

Note: Component locations and disassembly procedures may vary slightly on STT II models



Return to Section TOC
Return to Master TOC
Return to Section TOC
Return to Master TOC
Return to Section TOC
Return to Master TOC
Return to Section TOC
Return to Master TOC

Return to Section TOC
Return to Master TOC

## T1 AUXILIARY TRANSFORMER TEST (continued)

**FIGURE F.1 – T1 AUXILIARY TRANSFORMER AND J30/J31 LOCATION**

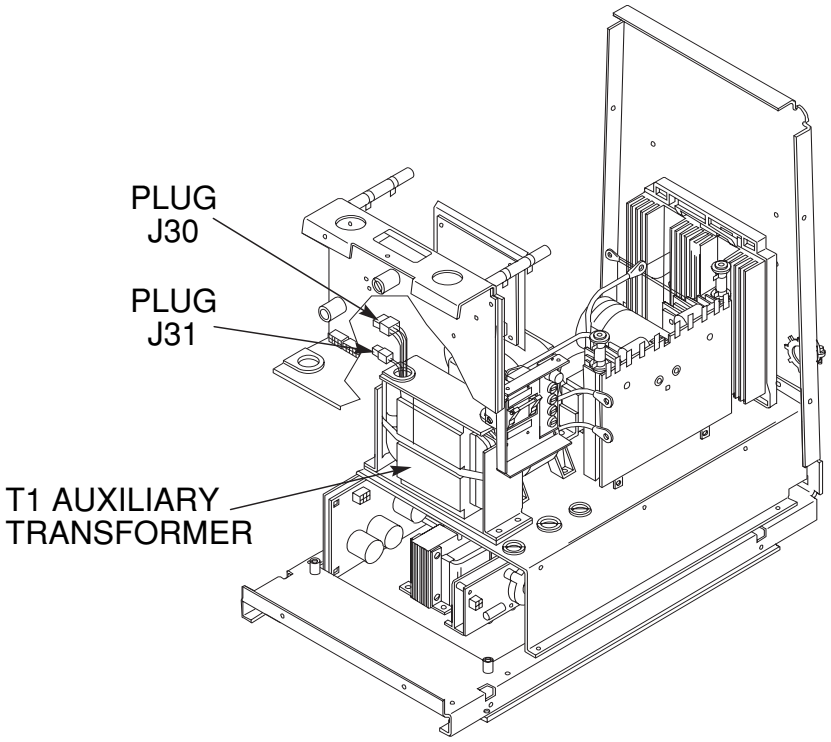


### TEST PROCEDURE

1. Turn off Invertec STT and disconnect main AC input power to the machine.
2. Using the 5/16" nut driver, remove the case wraparound cover.
3. Perform the ***Input Filter Capacitor Discharge Procedure.*** See the ***Maintenance*** section.

**⚠ WARNING**

**ELECTRIC SHOCK can kill.**

- Before continuing with the test procedure, perform the capacitor discharge procedure to avoid electric shock.

4. Locate the T1 auxiliary transformer and secondary lead molex plugs (J30 and J31) on the left side, just in front of the main transformer assembly. Check for broken or loose wires. See Figure F.1.

## T1 AUXILIARY TRANSFORMER TEST (continued)

**FIGURE F.2 – PRIMARY LEAD PLUG J21 LOCATION**

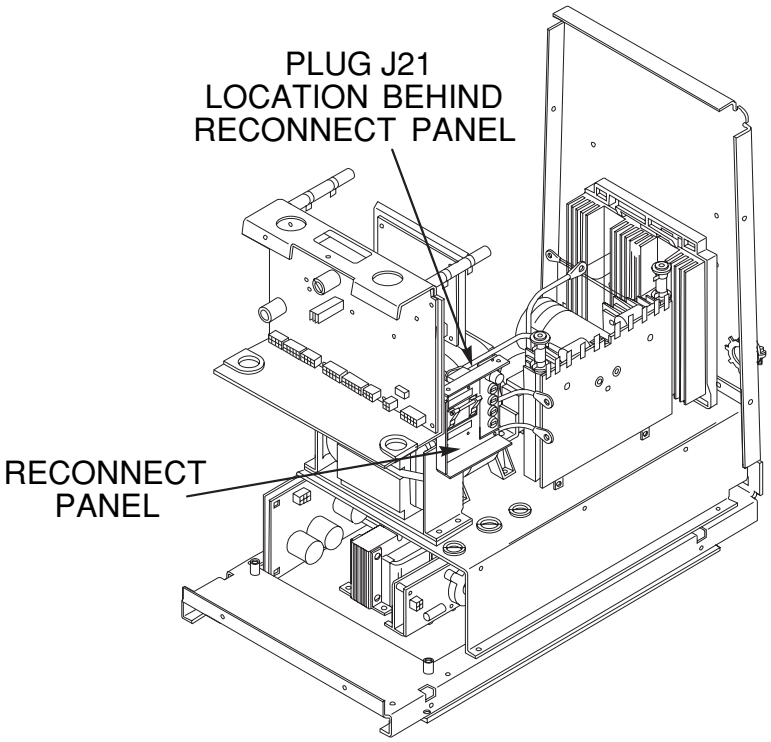


5. Locate the primary lead molex plug (J21) just behind the reconnect panel assembly on the right side of the machine. Check for broken or loose wires. See Figure F.2.
6. Disconnect plugs J30 and J31 from the wiring harness.

**⚠ WARNING**

**ELECTRIC SHOCK can kill.**

- With input power ON, there are high voltages inside the machine. Do not reach into the machine or touch any internal part.

7. Apply the correct input power to the machine and test for the correct secondary voltages at plugs J30 and J31. (Make sure the reconnect panel is configured properly for the input voltage being applied.) See ***Table F.1.***



Return to Section TOC
Return to Master TOC

## T1 AUXILIARY TRANSFORMER TEST (continued)

8. If the correct secondary voltages are present (according to Table F.1), the T1 transformer is functioning properly.
9. If the secondary voltages are missing or incorrect, the primary voltages must be checked.
10. Remove input power to the STT machine.
11. Perform the ***Input Filter Capacitor Discharge Procedure.***
12. Reconnect Plugs J30 & J31.

**⚠ WARNING**

**ELECTRIC SHOCK can kill.**

- Before continuing with the test procedure, perform the capacitor discharge procedure to avoid electric shock.

13. Gain access to the primary lead plug J21 by removing the reconnect panel assembly from the upper support panel using the 3/8" wrench and slot head screwdriver. This will allow the reconnect panel assembly to be moved out of the way. Be careful NOT to stress the leads connected to the reconnect panel. See ***Figure F.2.***
14. Before applying input power make certain the reconnect panel assembly is insulated and supported for safe operation.

**TABLE F.1 – T1 AUXILIARY TRANSFORMER VOLTAGES**

| TEST POINTS | NORMAL VOLTAGE |
|---|---|
| PLUG J30 PINS 1 TO 2 (LEADS 32 TO 33) | 115VAC |
| PLUG J31 PINS 1 TO 4 (LEADS 501 TO 504) | 18VAC |
| PLUG J31 PINS 2 TO 3 (LEADS 212 TO 503) | 24VAC |
| PLUG J31 PINS 2 TO 5 (LEADS 212 TO 43A) | 42VAC |
| PLUG J21 PINS 1 TO 4 (LEADS H1 TO H2) | 200/208VAC |
| PLUG J21 PINS 1 TO 2 (LEADS H1 TO H3) | 220/230VAC |
| PLUG J21 PINS 1 TO 3 (LEADS H1 TO H4) | 380/415VAC |
| PLUG J21 PINS 1 TO 6 (LEADS H1 TO H5) (H6) | 440/460VAC |

**NOTE:** If the main AC input supply voltage varies, the auxiliary transformer voltages will vary by the same percentages.



Return to Section TOC
Return to Master TOC
Return to Section TOC
Return to Master TOC
Return to Section TOC
Return to Master TOC
Return to Section TOC
Return to Master TOC

## T1 AUXILIARY TRANSFORMER TEST (continued)

**WARNING**

**ELECTRIC SHOCK can kill.**

- With input power ON, there are high voltages inside the machine. Do not reach into the machine or touch any internal part.

15. Apply the correct input power and carefully test for the correct primary voltages at plug J21. See ***Table F.1.***
16. If the correct AC input voltages are applied to the primary windings and any or all of the secondary voltages are missing or not correct, the T1 auxiliary transformer may be faulty.
17. After all tests are complete, reconnect plugs J30 and J31.
18. Install the case wraparound cover.



Return to Section TOC
Return to Master TOC
Return to Section TOC
Return to Master TOC
Return to Section TOC
Return to Master TOC
Return to Section TOC
Return to Master TOC

# NOTES

F-18

Return to Section TOC
Return to Master TOC
Return to Section TOC
Return to Master TOC
Return to Section TOC
Return to Master TOC
Return to Section TOC
Return to Master TOC

Return to Section TOC
Return to Master TOC
Return to Section TOC
Return to Master TOC
Return to Section TOC
Return to Master TOC
Return to Section TOC
Return to Master TOC

# T4 AUXILIARY TRANSFORMER TEST

**⚠ WARNING**

Service and repair should be performed by only Lincoln Electric factory trained personnel. Unauthorized repairs performed on this equipment may result in danger to the technician or machine operator and will invalidate your factory warranty. For your safety and to avoid electrical shock, please observe all safety notes and precautions detailed throughout this manual.

If for any reason you do not understand the test procedures or are unable to perform the test/repairs safely, contact the Lincoln Electric Service Department for electrical troubleshooting assistance before you proceed. Call 1-888-935-3877.

## TEST DESCRIPTION

This test will determine if the correct voltages are being:

a. applied to the primary of the T4 auxiliary transformer.
b. induced on the secondary windings of the T4 auxiliary transformer.

## MATERIALS NEEDED

Volt/Ohmmeter (Multimeter)
Invertec STT Wiring Diagrams
Isolated 115VAC supply
5/16" Nut driver
7/16" Wrench

Note: Component locations and disassembly procedures may vary slightly on STT II models

Return to Section TOC
Return to Master TOC

## T4 AUXILIARY TRANSFORMER TEST (continued)

**FIGURE F.3 – OUTPUT CHOKE/IGBT MODULE SPLICED CONNECTION**

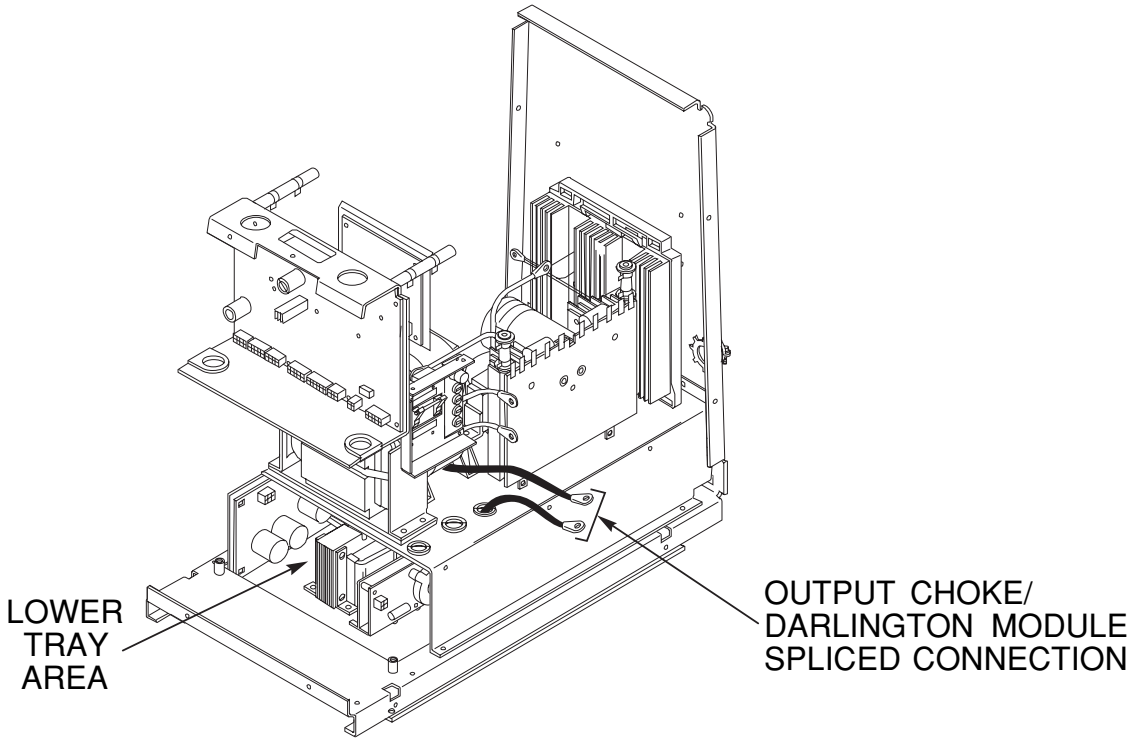


### TEST PROCEDURE

1. Turn off the Invertec STT and disconnect main AC input power to the machine.
2. Using the 5/16" nut driver, remove the case wraparound cover.
3. Perform the ***Input Filter Capacitor Discharge Procedure.*** See the ***Maintenance*** section.

**⚠ WARNING**

**ELECTRIC SHOCK can kill.**

- Before continuing with the test procedure, perform the capacitor discharge procedure to avoid electric shock.

4. Locate the lead connection splice from the output choke to the IGBT module. Remove the insulating sleeve. Cut any necessary cable ties. Using the 7/16" wrench, disconnect the lead splice. Thread the lower lead down into the lower tray assembly area. See Figure F.3.

Return to Section TOC
Return to Master TOC

## T4 AUXILIARY TRANSFORMER TEST (continued)

**FIGURE F.4 – PLUG J1 LOCATION**

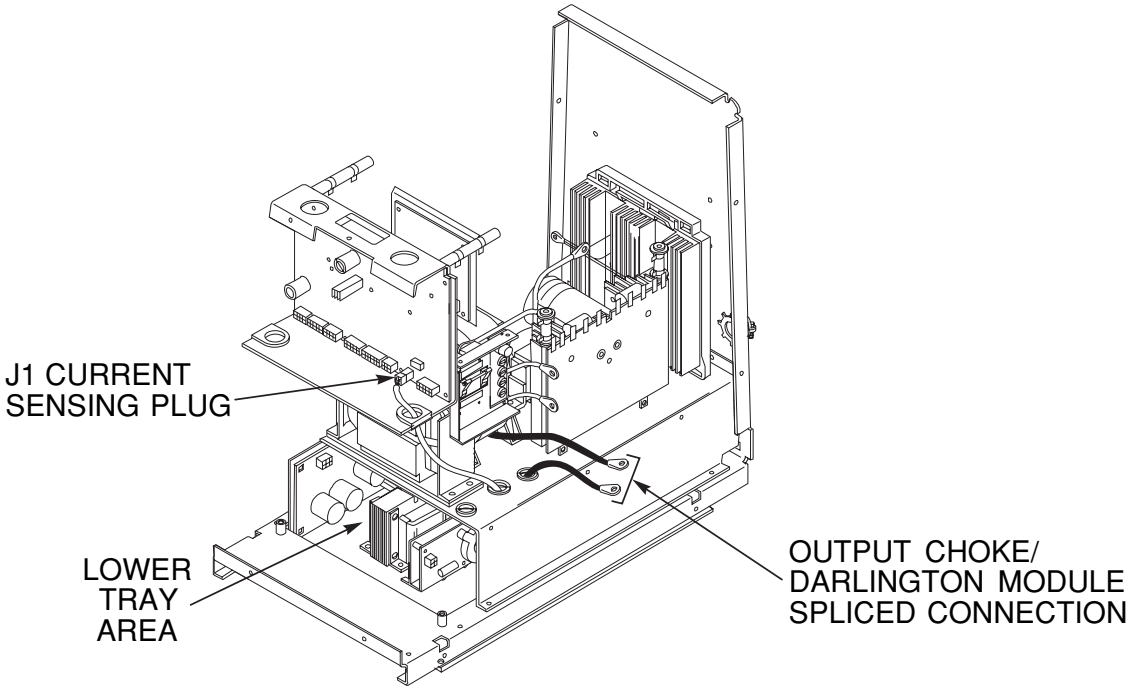


5. Disconnect the current sensing Plug J1 from the control PC board. Carefully remove Plug J1 and associated leads from control board compartment. See Figure F.4.

**FIGURE F.5 – PLUG J22 LOCATION**

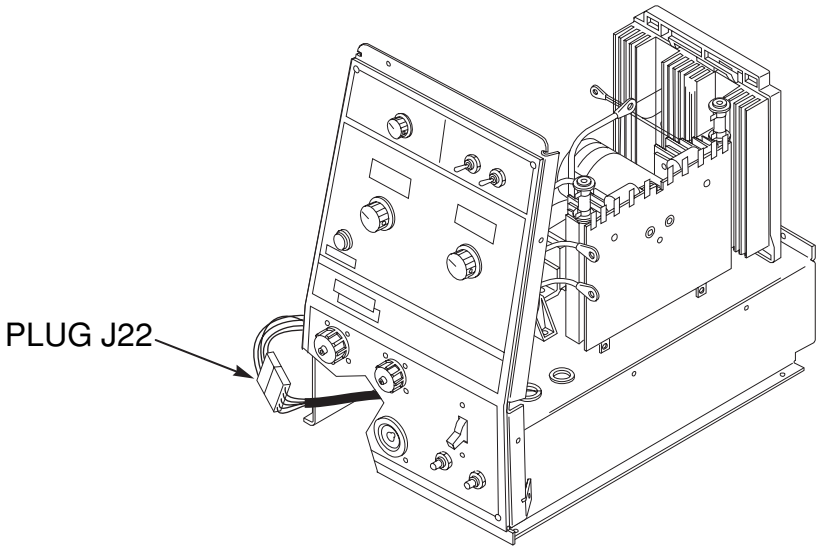


6. Locate and disconnect plug J22 from the wiring harness. See Figure F.5.

Return to Section TOC
Return to Master TOC

## T4 AUXILIARY TRANSFORMER TEST (continued)

**FIGURE F.6 – STT ON ITS RIGHT SIDE**

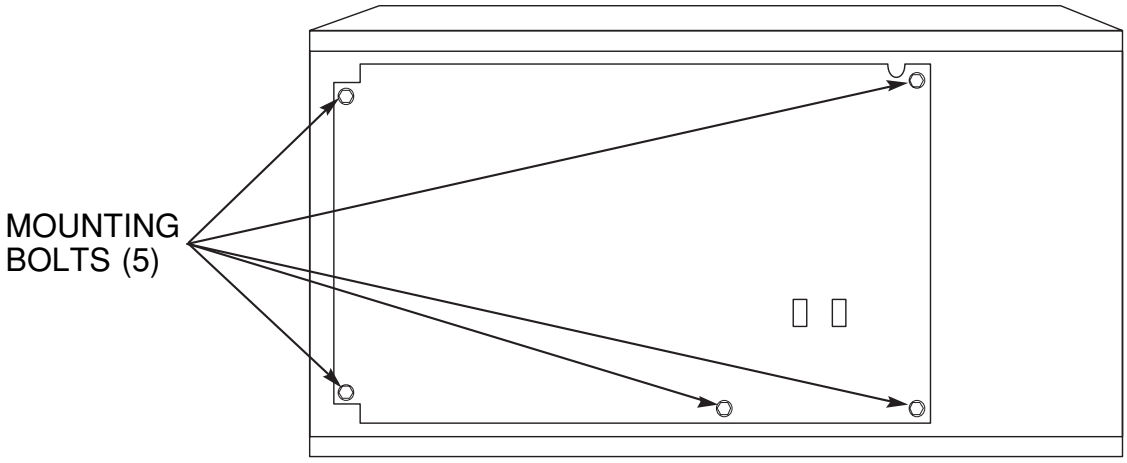


7. Carefully lift and tilt the Invertec STT machine onto its right side. See Figure F.6.
8. Using the 7/16" wrench, remove the five bolts holding the lower tray assembly to the case bottom.
9. Carefully slide out and support the lower tray assembly for testing purposes.
10. Locate and remove plug J13 from the IGBT drive board. See Figure F.7.

**FIGURE F.7 – PLUG J13 LOCATION**

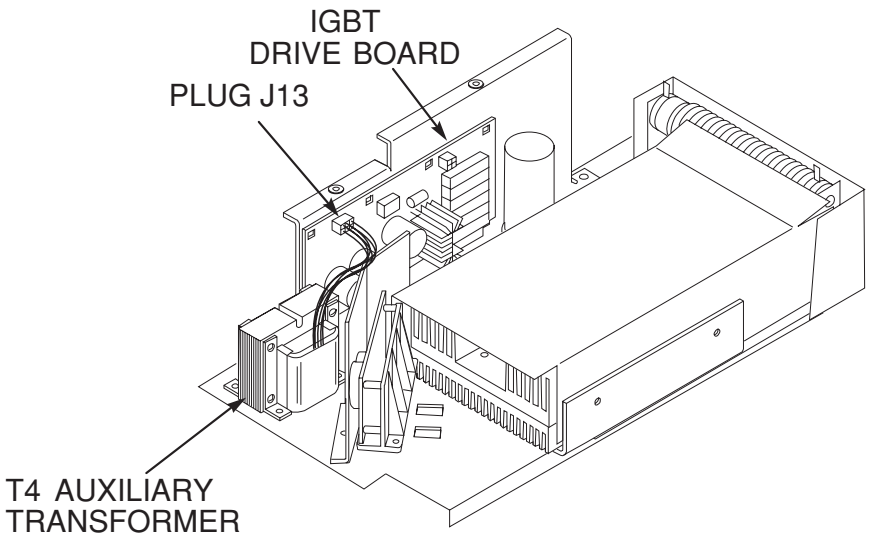


STT II

Return to Section TOC
Return to Master TOC

## T4 AUXILIARY TRANSFORMER TEST (continued)

**FIGURE F.8 – T4 TRANSFORMER LEAD CONNECTIONS**

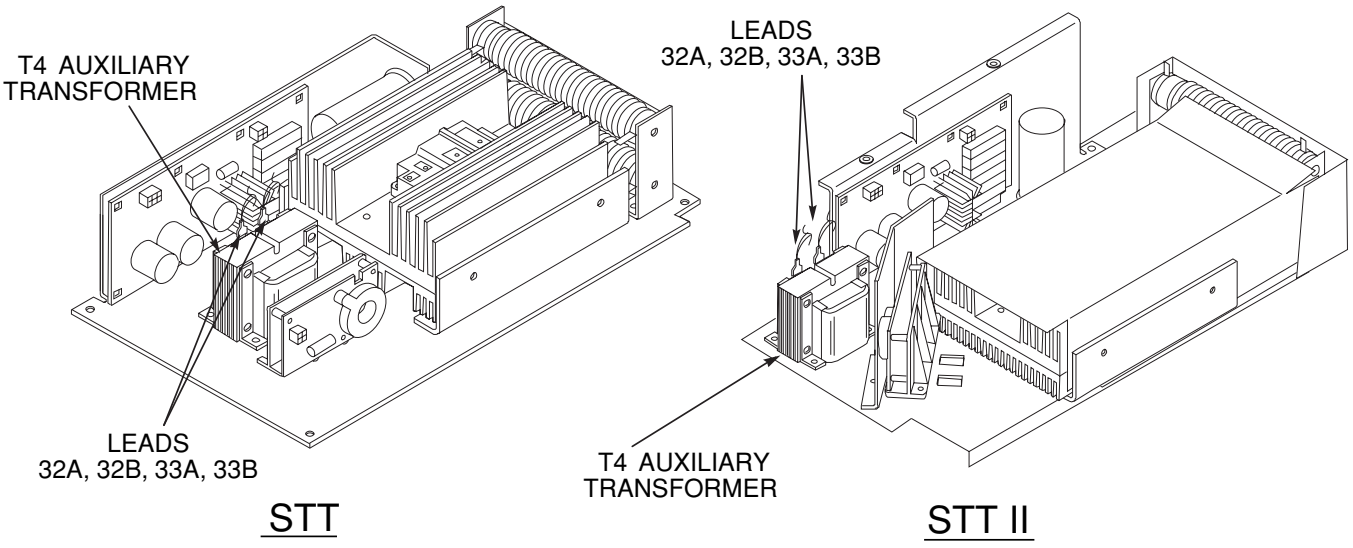


11. Locate and remove leads #32A, #32B and #33A, #33B from the T4 transformer tabs. See Figure F.8.

**⚠ WARNING**

ELECTRIC SHOCK can kill.

- With input power ON, there are high voltages inside the machine. Do not reach into the machine or touch any internal part.

12. Carefully apply the 115VAC isolated supply to the T4 transformer at the #32 and #33 tabs.

Return to Section TOC
Return to Master TOC

## T4 AUXILIARY TRANSFORMER TEST (continued)

**TABLE F.2 – T4 AUXILIARY TRANSFORMER VOLTAGES**

| TEST POINTS | NORMAL VOLTAGES |
|---|---|
| PLUG J13 PINS 5 TO 6 | 6VAC |
| PLUG J13 PINS 2 TO 3 | 10VAC |
| PLUG J22 PINS 1 TO 2 (LEADS 240 TO 241) | 18VAC |
| PLUG J22 PINS 2 TO 9 (LEADS 241 TO 242) | 18VAC |
| PLUG J22 PINS 3 TO 4 (LEADS 243 TO 244) | 18VAC |
| PLUG J22 PINS 12 TO 13 (LEADS 245 TO 246) | 18VAC |

13. Check the secondary AC voltages according to Table F.2.
14. With the correct 115VAC applied to the primary winding (#32 to #33), if any or all of the secondary voltages are missing or low, the T4 auxiliary transformer may be faulty. Replace the T4 auxiliary transformer.
15. After all tests are completed, reconnect the following:

    Leads #32A, #32B, #33A, #33B to the T4 transformer tabs

    Plug J13 to the IGBT drive board

    Plug J22 to the wiring harness

    Reinstall lower tray assembly using 7/16” wrench and 5 bolts

    Plug J1 to the control PC board

    Reconnect lead splice from the output choke to the IGBT module. Reposition insulating sleeve.

16. Install the case wraparound cover.

Return to Section TOC
Return to Master TOC
Return to Section TOC
Return to Master TOC
Return to Section TOC
Return to Master TOC
Return to Section TOC
Return to Master TOC

# INPUT RECTIFIER TEST

**⚠ WARNING**

Service and repair should be performed by only Lincoln Electric factory trained personnel. Unauthorized repairs performed on this equipment may result in danger to the technician or machine operator and will invalidate your factory warranty. For your safety and to avoid electrical shock, please observe all safety notes and precautions detailed throughout this manual.

If for any reason you do not understand the test procedures or are unable to perform the test/repairs safely, contact the Lincoln Electric Service Department for electrical troubleshooting assistance before you proceed. Call 1-888-935-3877.

## TEST DESCRIPTION

This test will help determine if the input rectifier and associated components are functioning properly.

## MATERIALS NEEDED

5/16" Nut driver
Analog Voltmeter/ohmmeter (Multimeter)
Inverter STT Wiring Diagrams

Note: Component locations and disassembly procedures may vary slightly on STT II models

## INPUT RECTIFIER TEST (continued)

**FIGURE F.9 - INPUT RECTIFIER LOCATION**

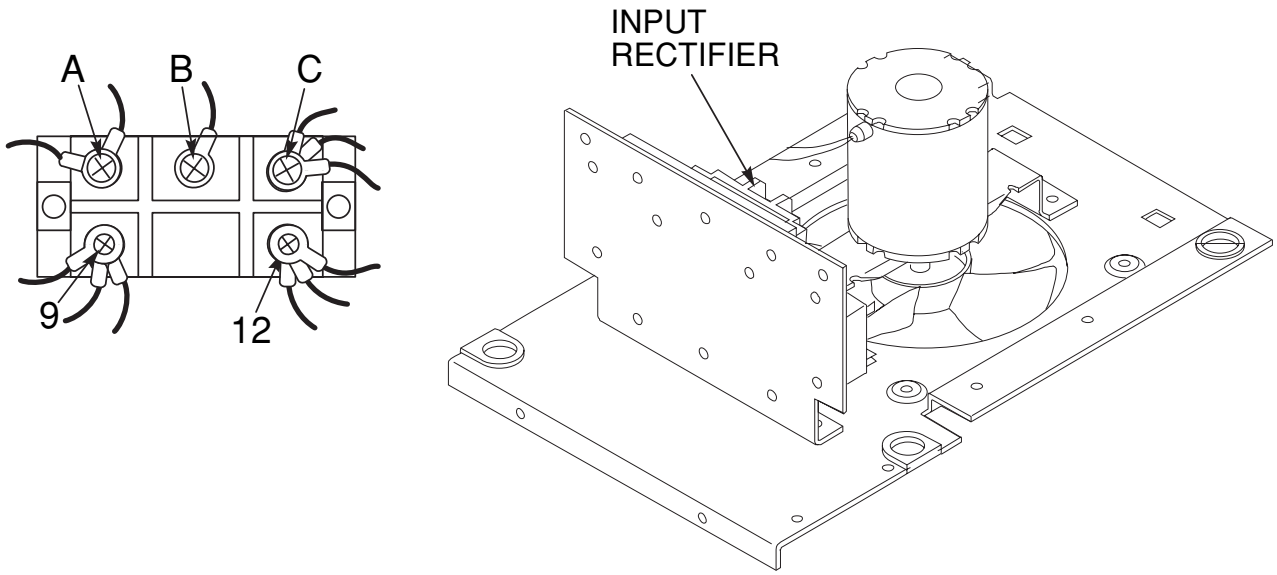


### TEST PROCEDURE

1. Turn off the Invertec STT and disconnect main AC input power to the machine.
2. Using the 5/16" nut driver, remove the case wraparound cover.
3. Perform the ***Input Filter Capacitor Discharge procedure.*** See the ***Maintenance*** section.

**⚠ WARNING**

**ELECTRIC SHOCK can kill.**

- Before continuing with the test procedure, perform the capacitor discharge procedure to avoid electric shock.

4. Locate the input rectifier. See Figure F.9.
5. Locate the leads needed to perform the tests. See Figure F.9.
6. Use an ANALOG ohmmeter to perform the tests shown in ***Table F.3.***



Return to Section TOC
Return to Master TOC

## INPUT RECTIFIER TEST (continued)

**TABLE F.3 – INPUT RECTIFIER TEST**

| TEST POINTS | | |
|---|---|---|
| **+PROBE** | **-PROBE** | **ACCEPTABLE METER READING** |
| 9 | A | Greater than 100K ohms |
| 9 | B | Greater than 100K ohms |
| 9 | C | Greater than 100K ohms |
| A | 9 | Less than 100 ohms |
| B | 9 | Less than 100 ohms |
| C | 9 | Less than 100 ohms |
| 12 | A | Less than 100 ohms |
| 12 | B | Less than 100 ohms |
| 12 | C | Less than 100 ohms |
| A | 12 | Greater than 100K ohms |
| B | 12 | Greater than 100K ohms |
| C | 12 | Greater than 100K ohms |

6. Replace the input rectifier when any of the tests are NOT OK.

**NOTE:** When installing a new input rectifier, torque the mounting nuts (in a cross-tightening pattern) to 6 inch-pounds (.7 Nm). Torque terminals to 26 inch-pounds (3 Nm). PROCEED TO STEP 7 TO CHECK RELATED COMPONENTS.

7. Inspect main power switch S1 and replace if faulty. Go to step 8.
8. Test capacitors C1 and C2 and replace both capacitors if either is faulty.

**NOTE:** Faulty capacitors could be the reason for input rectifier failure.

Visually inspect the capacitors for leakage, damage, etc., and use appropriate test equipment to determine component integrity.

9. Perform the ***Switch Board Test.***
10. After all tests are completed, install the case wraparound cover.



Return to Section TOC
Return to Master TOC

# NOTES

F-28

Return to Section TOC
Return to Master TOC
Return to Section TOC
Return to Master TOC
Return to Section TOC
Return to Master TOC
Return to Section TOC
Return to Master TOC

Return to Section TOC
Return to Master TOC

# CAPACITOR BALANCE TEST

**⚠ WARNING**

Service and repair should be performed by only Lincoln Electric factory trained personnel. Unauthorized repairs performed on this equipment may result in danger to the technician or machine operator and will invalidate your factory warranty. For your safety and to avoid electrical shock, please observe all safety notes and precautions detailed throughout this manual.

If for any reason you do not understand the test procedures or are unable to perform the test/repairs safely, contact the Lincoln Electric Service Department for electrical troubleshooting assistance before you proceed. Call 1-888-935-3877.

## TEST DESCRIPTION

This test will help determine if the capacitors, bleeder resistors and switch boards are functioning properly.

## MATERIALS NEEDED

5/16" Nut driver
Analog Volt/ohmmeter (Multimeter)

Note: Component locations and disassembly procedures may vary slightly on STT II models

Return to Section TOC
Return to Master TOC

## CAPACITOR BALANCE TEST (continued)

**FIGURE F.10 – SWITCH BOARD TEST POINTS**

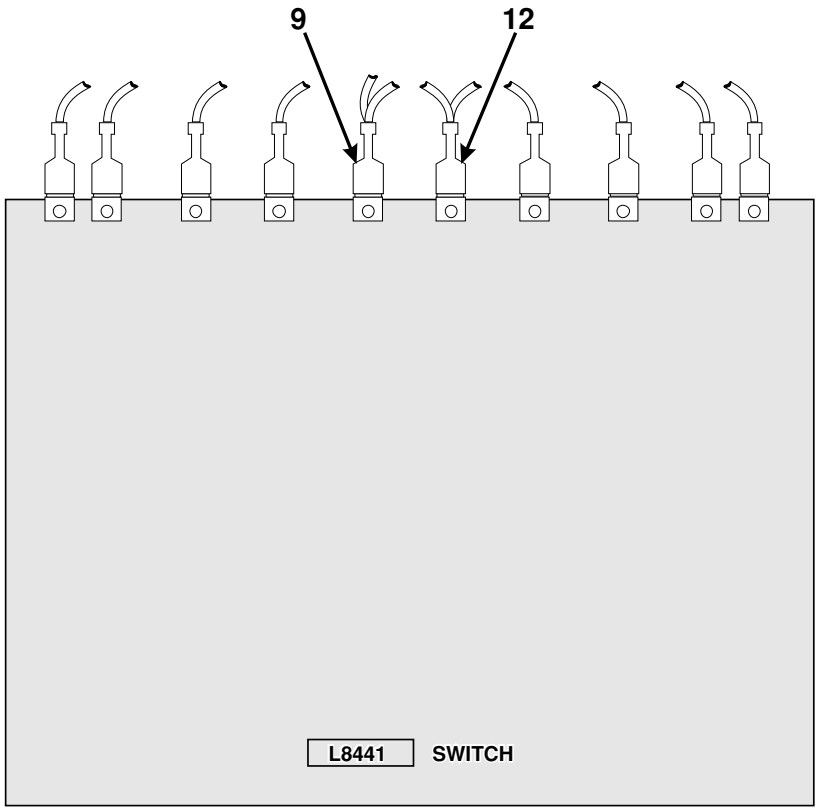


### TEST PROCEDURE

1. Turn off the Invertec STT and disconnect main AC input power to the machine.
2. Using the 5/16" nut driver, remove the case wraparound cover.

**⚠ WARNING**

**ELECTRIC SHOCK can kill.**

- With input power ON, there are high voltages inside the machine. Do not reach into the machine or touch any internal part.

3. Carefully apply the correct input power to the machine.

**NOTE:** This test should only be conducted when the machine reconnect switch and jumper are set for high voltage (above 380VAC) and the proper line voltage is applied.

4. Test for VDC across terminals #9 and #12 of one switch board and repeat the test for the other switch board. See ***Table F.4*** in this procedure for expected voltage readings. See Figure F.10.
   A. If less than 25VDC difference is measured between each switch board, the capacitive balance is OK. This indicates that capacitors C1, C2, and resistors R1 and R9 are functioning properly. Proceed to Step #5.
   B. If more than 25VDC difference is measured between each switch board, test each of the following components: Capacitors C1, C2 and resistors R1 and R9. See the Invertec STT Wiring Diagram.

Return to Section TOC
Return to Master TOC

## CAPACITOR BALANCE TEST (continued)

**TABLE F.4 – EXPECTED VOLTAGE READINGS**

| If VAC Input is: | VDC at terminals #9 (+) and #12 (-) should be approximately: |
|---|---|
| 460 VAC<br>440 VAC<br>415 VAC<br>380 VAC | 325VDC<br>311VDC<br>293VDC<br>269VDC |

5. Adjust the Peak and Background controls to the minimum settings (controls on case front).
6. Jumper together pins "C" and "D" on the 14 pin amphenol. This will energize the output terminals.
7. Test for VDC across terminals #9 and #12 of one switch board and repeat the test for the other switch board. See Table F.4 in this procedure for expected voltage readings. See ***Figure F.10.***
   A. If less than 15VDC difference is measured between each switch board, the test is OK.
   B. If more than 15VDC difference is measured between each switch board, the switch board(s) and or power PC board may be faulty. Perform the ***Switch Board Test.*** Perform the ***Power Board Test.***
8. After all tests are completed, remove the jumper between pins C and D on the 14-pin amphenol.
9. Install the case wraparound cover.

# NOTES

F-32

Return to Section TOC
Return to Master TOC
Return to Section TOC
Return to Master TOC
Return to Section TOC
Return to Master TOC
Return to Section TOC
Return to Master TOC

Return to Section TOC
Return to Master TOC
Return to Section TOC
Return to Master TOC
Return to Section TOC
Return to Master TOC
Return to Section TOC
Return to Master TOC

# SWITCH BOARD TEST

**⚠ WARNING**

Service and repair should be performed by only Lincoln Electric factory trained personnel. Unauthorized repairs performed on this equipment may result in danger to the technician or machine operator and will invalidate your factory warranty. For your safety and to avoid electrical shock, please observe all safety notes and precautions detailed throughout this manual.

If for any reason you do not understand the test procedures or are unable to perform the test/repairs safely, contact the Lincoln Electric Service Department for electrical troubleshooting assistance before you proceed. Call 1-888-935-3877.

## TEST DESCRIPTION

The Switch Board Test determines if the switch boards are operating properly. This resistance test is preferable to a voltage test with the machine energized because these boards can be damaged easily. In addition, it is dangerous to work on these boards with machine power ON.

## MATERIALS NEEDED

Analog Volt/ohmmeter (Multimeter)
5/16" Nut driver

Note: Component locations and disassembly procedures may vary slightly on STT II models

Return to Section TOC
Return to Master TOC

## SWITCH BOARD TEST (continued)

**FIGURE F.11 - SWITCH BOARD RESISTANCE TEST**

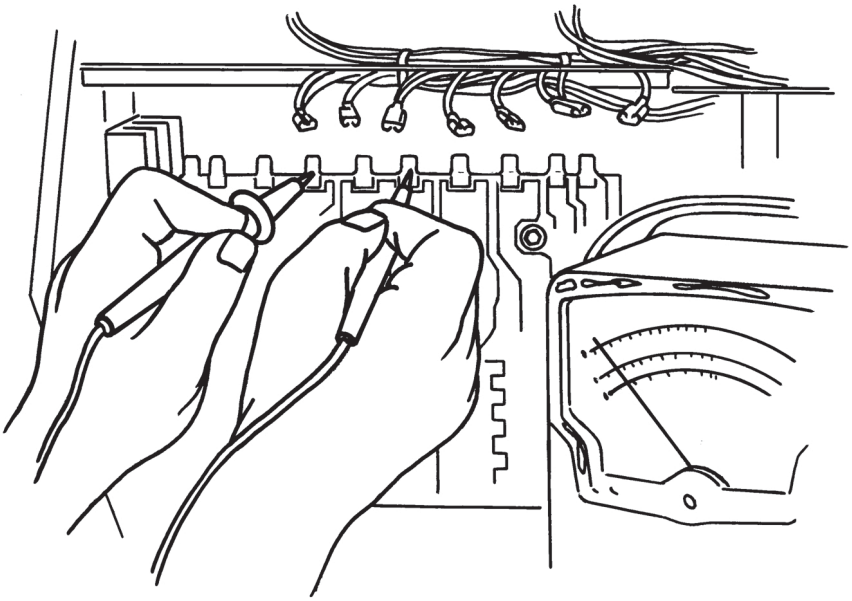

### TEST PROCEDURE

**NOTE:** There are two switch boards. One is located on each side of the machine.

**NOTE:** The switch boards are designed to receive gate (turn-on) signals from the driver board (pulse transformer secondaries). The internal board circuitry processes the signals and outputs them to the FETs. The switch board circuitry contains snubber circuitry to protect the FETs. This protection is supplemented by off-board resistors. The switch board design accommodates the connection point(s) for the capacitor(s), main transformer primary windings, input rectifier, and reconnect switches.

1. Turn off Invertec STT and disconnect main AC input power to the machine.
2. Using the 5/16" nut driver, remove the case wraparound cover.
3. Perform the ***Input Filter Capacitor Discharge Procedure.*** See the ***Maintenance*** section.

**⚠ WARNING**

**ELECTRIC SHOCK can kill.**

- Before continuing with the test procedure, perform the capacitor discharge procedure to avoid electric shock.

4. Disconnect all wiring harness leads (401/403, 1/8, 9, 12, 4/5, 402/404) from the switch board.
5. Fold the leads up so they do not interfere with the exposed terminals. See Figure F.11.
6. Using an analog ohmmeter, perform the resistance tests detailed in Table F.5 and shown in Figure F.11. If any test fails, replace both switch boards. See the ***Switch Board Removal and Replacement*** procedure.
7. If the switch boards appear to be burned or overheated, or if the machine was supplied by a 380 VAC or higher voltage supply when the failure occurred, replace the capacitors and the switch boards.

Return to Section TOC
Return to Master TOC

## SWITCH BOARD TEST (continued)

**TABLE F.5 – SWITCH BOARD RESISTANCE TEST**

| Apply Positive Test Probe to Terminal | Apply Negative Test Probe to Terminal | Test Result | Conclusion | Repair Action | Next Procedure | Notes |
|---|---|---|---|---|---|---|
| 1/8 | 12 | Greater than 1K ohm | OK | None | Continue | |
| | | Less than 100 ohms | Shorted | Replace both switch boards | Snubber Test | |
| 12 | 1/8 | Less than 100 ohms | OK | None | Continue | |
| | | Greater than 1K ohm | Open | Replace both switch boards | Snubber Test | |
| 9 | 4/5 | Greater than 1K ohm | OK | None | Continue | |
| | | Less than 100 ohms | Shorted | Replace both switch boards | Snubber Test | |
| 4/5 | 9 | Less than 100 ohms | OK | None | Continue | |
| | | Greater than 1K ohm | Open | Replace both switch boards | Snubber Test | |
| 1/8 | 9 | Less than 100 ohms | OK | None | Continue | |
| | | Greater than 1K ohm | Open | Replace both switch boards | Snubber Test | |
| 9 | 1/8 | Greater than 1K ohm | OK | None | Continue | |
| | | Less than 100 ohms | Shorted | Replace both switch boards | Snubber Test | |
| 12 | 4/5 | Less than 100 ohms | OK | None | Continue | |
| | | Greater than 1K ohm | Open | Replace both switch boards | Snubber Test | |
| 4/5 | 12 | Greater than 1K ohm | OK | None | Continue | |
| | | Less than 100 ohms | Shorted | Replace both switch boards | Snubber Test | |

**Continued . . .**

**NOTE:** K ohm = ohm reading multiplied by 1000.
**NOTE:** Always make sure that switch boards are changed in matched pairs. Never mix an old style (different part number) switch board with a new switch board (new part number).

Return to Section TOC
Return to Master TOC

## SWITCH BOARD TEST (continued)

**TABLE F.5 – SWITCH BOARD RESISTANCE TEST *(continued)***

| Apply Positive Test Probe to Terminal | Apply Negative Test Probe to Terminal | Test Result | Conclusion | Repair Action | Next Procedure | Notes |
|---|---|---|---|---|---|---|
| 12 | 401/403 | Greater than 1K ohm | OK | None | Continue | |
| | | Less than 100 ohms | Shorted | Replace both switch boards | Snubber Test | |
| 401/403 | 12 | Less than 100 ohms | OK | None | Continue | |
| | | Greater than 1K ohm | Open | Replace both switch boards | Snubber Test | |
| 9 | 402/404 | Less than 100 ohms | OK | None | Continue | |
| | | Greater than 1K ohm | Open | Replace both switch boards | Snubber Test | |
| 402/404 | 9 | Greater than 1K ohm | OK | None | Continue | |
| | | Less than 100 ohms | Shorted | Replace both switch boards | Snubber Test | |

**NOTE:** K ohm = ohm reading multiplied by 1000.
**NOTE:** Always make sure that switch boards are changed in matched pairs. Never mix an old style (different part number) switch board with a new switch board (new part number).

8. Reconnect all wiring harness leads (401/403, 1/8, 9, 12, 4/5, 402/404) to the switch board.
9. Install the case wraparound cover.

Return to Section TOC
Return to Master TOC

## SNUBBER RESISTORS TEST

**⚠ WARNING**

Service and repair should be performed by only Lincoln Electric factory trained personnel. Unauthorized repairs performed on this equipment may result in danger to the technician or machine operator and will invalidate your factory warranty. For your safety and to avoid electrical shock, please observe all safety notes and precautions detailed throughout this manual.

If for any reason you do not understand the test procedures or are unable to perform the test/repairs safely, contact the Lincoln Electric Service Department for electrical troubleshooting assistance before you proceed. Call 1-888-935-3877.

### DESCRIPTION

This test will determine if the snubber resistors (R4, R5, R6, R7) are functioning properly.

### MATERIALS NEEDED

Analog Volt/ohmmeter (Multimeter)
STT Wiring Diagrams
5/16” Nut driver

Note: Component locations and disassembly procedures may vary slightly on STT II models

Return to Section TOC
Return to Master TOC

## SNUBBER RESISTORS TEST (continued)

FIGURE F.12 - REMOVING LEADS

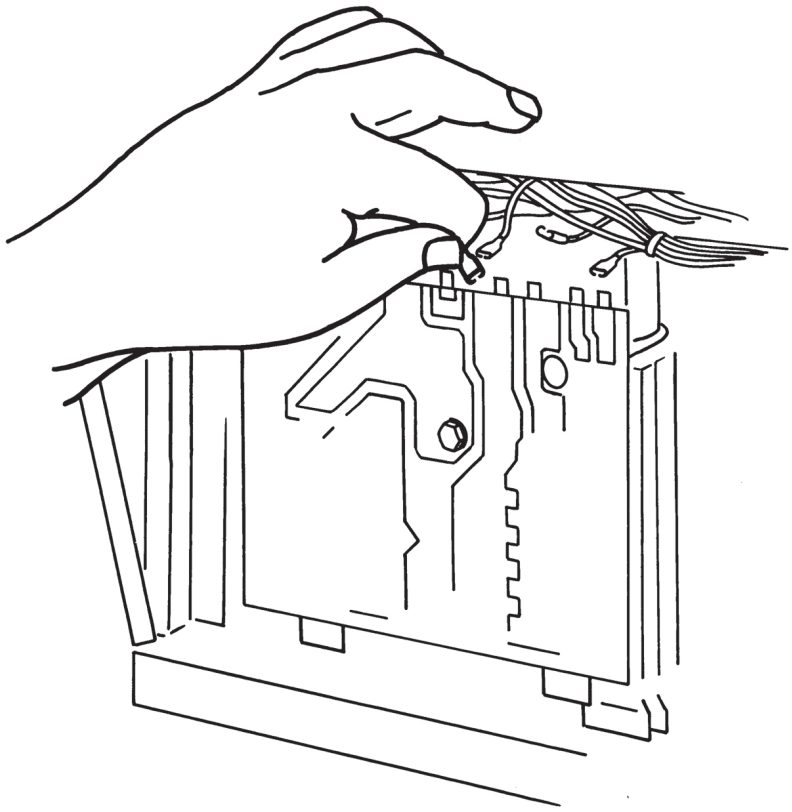

### TEST PROCEDURE

1. Turn off Invertec STT and disconnect main AC input power to the machine.
2. Using the 5/16" nut driver, remove the case wraparound cover.
3. Perform the ***Input Filter Capacitor Discharge Procedure.*** See the ***Maintenance*** section.

**⚠ WARNING**

**ELECTRIC SHOCK can kill.**

- Before continuing with the test procedure, perform the capacitor discharge procedure to avoid electric shock.

4. Locate and gain access to the switch board.
5. Remove leads from terminals 401/403, 402/404 on the switch board. See Figure F.12.

## SNUBBER RESISTORS TEST (continued)

FIGURE F.13 - SWITCH BOARD TEST POINTS

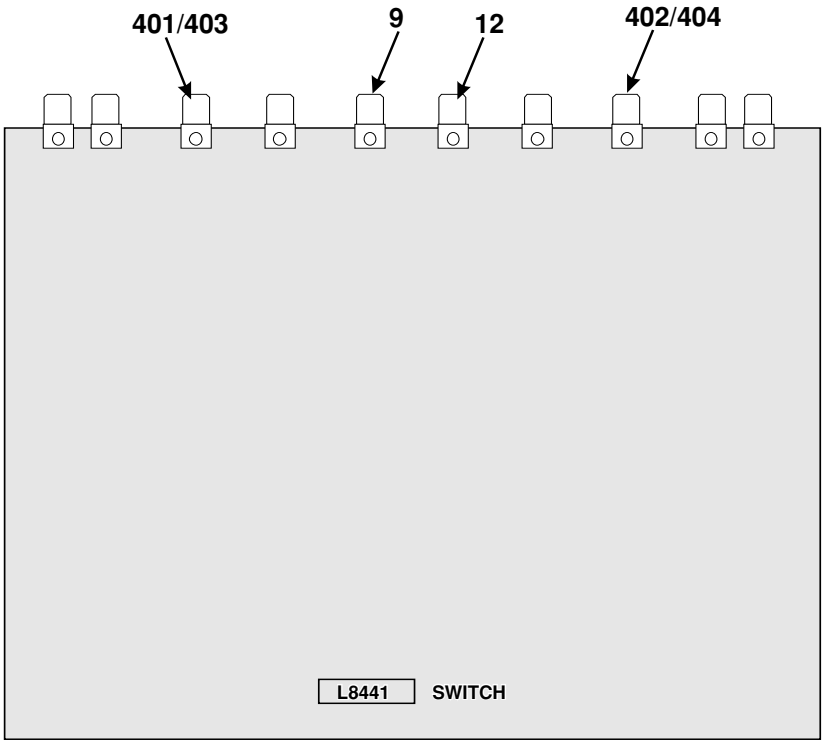


6. Test for 25 ohms resistance from lead terminal 401 to terminal 12 on the switch board. See Figure F.13.
   a. If 25 ohms is measured, resistor R4 is OK.
   b. If 30 ohms or more is measured, resistor R4 is faulty and must be replaced.
   c. If 20 ohms or less is measured, resistor R4 is faulty and must be replaced.
7. Repeat the same procedures to test R5, R6, and R7 according to Table F.6.
8. Reconnect leads 401/403 and 402/404 to the switch board.
9. Install the case wraparound cover.

TABLE F.6 – SNUBBER RESISTORS TEST

| Check | Test Result | Conclusion | Next Test Step | Repair Action |
|---|---|---|---|---|
| Lead 401 to Terminal 12 | 25 ohms | OK | Continue | |
| | >30 ohms<br><20 ohms | R4 open<br>R4 faulty | | Replace R4 |
| Lead 402 to Terminal 9 | 25 ohms | OK | Continue | |
| | >30 ohms<br><20 ohms | R5 open<br>R5 faulty | | Replace R5 |
| Lead 403 to Terminal 12 | 25 ohms | OK | Continue | |
| | >30 ohms<br><20 ohms | R6 open<br>R6 faulty | | Replace R6 |
| Lead 404 to Terminal 9 | 25 ohms | OK | Continue | |
| | >30 ohms<br><20 ohms | R7 open<br>R7 faulty | | Replace R7 |

> = GREATER THAN  < = LESS THAN



Return to Section TOC
Return to Master TOC

# NOTES

F-40

Return to Section TOC
Return to Master TOC
Return to Section TOC
Return to Master TOC
Return to Section TOC
Return to Master TOC
Return to Section TOC
Return to Master TOC

# POWER BOARD TEST

**⚠ WARNING**

Service and repair should be performed by only Lincoln Electric factory trained personnel. Unauthorized repairs performed on this equipment may result in danger to the technician or machine operator and will invalidate your factory warranty. For your safety and to avoid electrical shock, please observe all safety notes and precautions detailed throughout this manual.

If for any reason you do not understand the test procedures or are unable to perform the test/repairs safely, contact the Lincoln Electric Service Department for electrical troubleshooting assistance before you proceed. Call 1-888-935-3877.

## TEST DESCRIPTION

This test will help determine if the power PC board is receiving the correct AC voltages and also if the correct DC voltages are being generated on the power PC board.

## MATERIALS NEEDED

5/16" Nut driver
Volt/ohmmeter (Multimeter)
Wiring diagram

Note: Component locations and disassembly procedures may vary slightly on STT II models



Return to Section TOC
Return to Master TOC
Return to Section TOC
Return to Master TOC
Return to Section TOC
Return to Master TOC
Return to Section TOC
Return to Master TOC

## POWER BOARD TEST (continued)

FIGURE F.14 – REMOVING THE FRONT PANEL ASSEMBLY

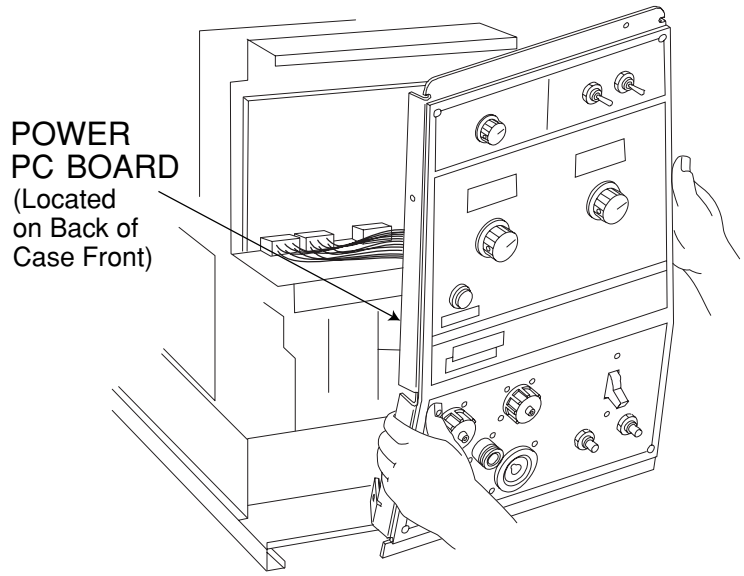


### QUICK CHECK PROCEDURE

1. Turn off the Invertec STT and disconnect main AC input power to the machine.
2. Using the 5/16" nut driver, remove the case wraparound cover.
3. Locate relays CR1 and CR2 just to the front of the fan motor.

**⚠ WARNING**

**ELECTRIC SHOCK can kill.**

- With input power ON, there are high voltages inside the machine. Do not reach into the machine or touch any internal part.

4. Apply the correct input power and turn ON the Invertec STT machine.
5. After about a 5 second delay the relays should activate. This can be determined by an audible click which can be heard when the relays are activated. If the relays are being activated, the power PC board is most likely OK. If the relays are NOT being activated, the power PC board could be faulty. Continue with the voltage tests.

### VOLTAGE TEST PROCEDURE

1. Remove input power to the Invertec STT.
2. Perform the ***Input Filter Capacitor Discharge Procedure.*** See the ***Maintenance*** section.

**⚠ WARNING**

**ELECTRIC SHOCK can kill.**

- Before continuing with the test procedure, perform the capacitor discharge procedure to avoid electric shock.

3. Using the 5/16" nut driver, loosen the front control panel by removing the four sheet metal screws from the top and bottom of the front panel. Carefully move the front panel assembly to the right to gain access to the power PC board. See Figure F.14.



Return to Section TOC
Return to Master TOC

## POWER BOARD TEST (continued)

FIGURE F.15 – POWER PC BOARD TEST POINTS

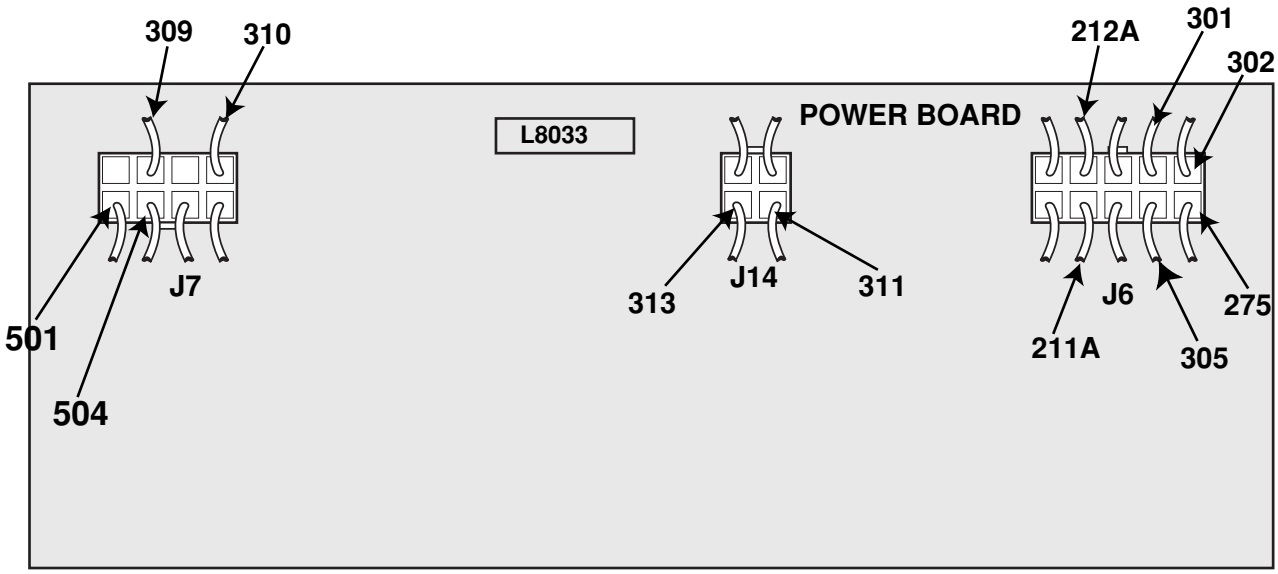


4. Secure and insulate the front panel assembly for POWER ON testing.

**⚠ WARNING**

**ELECTRIC SHOCK can kill.**

- With input power ON, there are high voltages inside the machine. Do not reach into the machine or touch any internal part.

5. Apply the correct input power and turn ON the machine.
6. Carefully test for 18VAC input from the T1 Auxiliary Transformer between plug J7 pin 5 (lead#501) and plug J7 pin 6 (lead #504) at the power PC board. See Figure F. 15.

**NOTE:** If the 18VAC is NOT present, perform the ***T1 Auxiliary Transformer Test.*** Also check associated wiring. See the Wiring Diagram.



Return to Section TOC
Return to Master TOC

## POWER BOARD TEST (continued)

**FIGURE F.16 – SIMPLIFIED TRIGGER CIRCUIT**

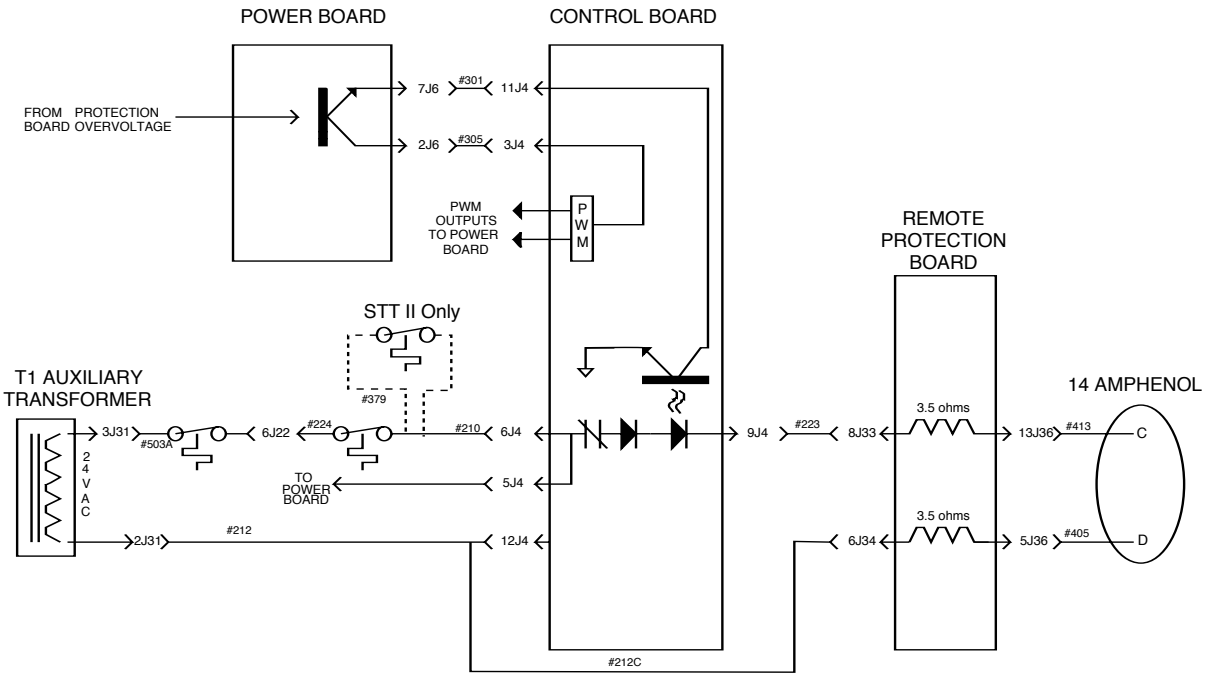


7. Carefully test for 15VDC output from the power PC board at plug J6 pin1 (lead #275)(-) and plug J6 pin 6 (lead #302)(+). See ***Figure F.15.***

**NOTE:** If the 18VAC is present but the 15VDC is NOT, the power PC board may be faulty.

8. Carefully test for 24VAC input from the T1 Auxiliary Transformer between plug J6 pin 4 (lead#211A) and plug J6 pin 9 (lead#212A). See ***Figure F.15.***

**NOTE:** If the 24VAC is NOT present, perform the ***T1 Auxiliary Transformer Test.*** Also check the associated wiring. See the Wiring Diagram. The control PC board or thermostats may be faulty. See Figure F.16, the Simplified Trigger Circuit diagram.

9. Carefully test for 24VDC at the power PC board at plug J7 pin 2 (lead #309)(+) to plug J14 pin2 (lead #313)(-). See ***Figure F.15.***

**NOTE:** If the 24VAC is present but the 24VDC is NOT, the power PC board may be faulty.

10. Carefully test for approximately 24VDC at plug J7 pin 2 (lead#309)(+) to plug J7 pin 4 (lead#310)(-). If the 24VDC is NOT present, test for approximately 1VDC at plug J14 pin1 (lead#311)(+) to plug J14 pin 2 (lead#313)(-). See ***Figure F.15.***

**NOTE:** If more than 1VDC is measured, perform the ***Protection Board Test.***

**NOTE:** If approximately 1VDC IS present and the 24VDC is NOT present at leads #309 to #310, the power PC board may be faulty.

11. After all tests are completed, install the front panel assembly.

12. Install the case wraparound cover.



Return to Section TOC
Return to Master TOC

Return to Section TOC
Return to Master TOC
Return to Section TOC
Return to Master TOC
Return to Section TOC
Return to Master TOC
Return to Section TOC
Return to Master TOC

# PROTECTION BOARD TEST

**⚠ WARNING**

Service and repair should be performed by only Lincoln Electric factory trained personnel. Unauthorized repairs performed on this equipment may result in danger to the technician or machine operator and will invalidate your factory warranty. For your safety and to avoid electrical shock, please observe all safety notes and precautions detailed throughout this manual.

If for any reason you do not understand the test procedures or are unable to perform the test/repairs safely, contact the Lincoln Electric Service Department for electrical troubleshooting assistance before you proceed. Call 1-888-935-3877.

## TEST DESCRIPTION

This test will help determine if the protection PC board is functioning properly.

## MATERIALS NEEDED

5/16" Nut driver
Volt/ohmmeter (Multimeter)
Wiring Diagrams

Note: Component locations and disassembly procedures may vary slightly on STT II models

## PROTECTION BOARD TEST (continued)

FIGURE F.17 – PROTECTION PC BOARD TEST POINTS

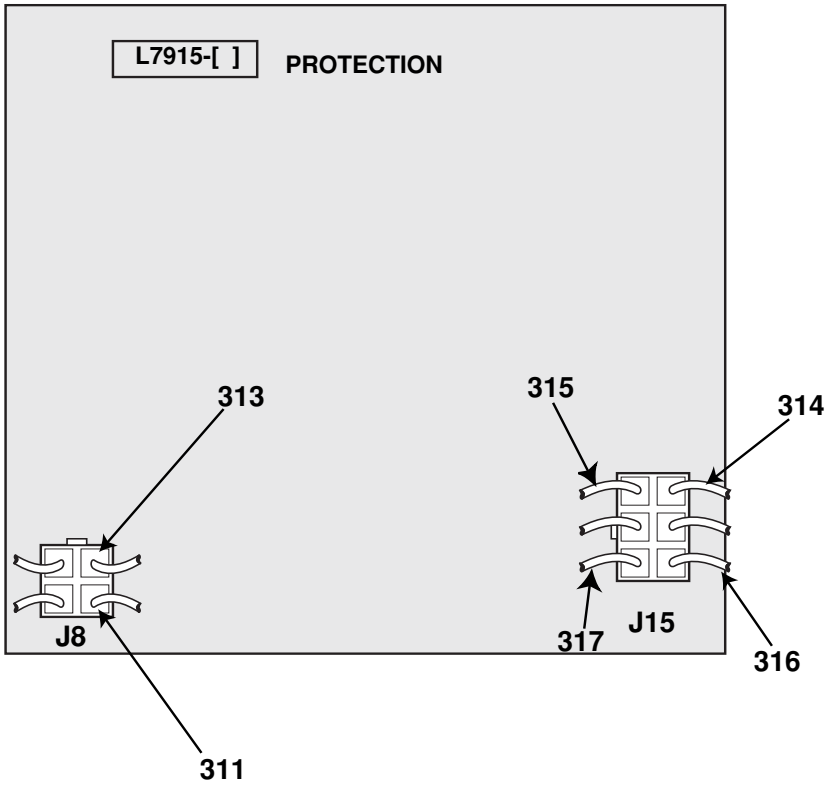


## TEST PROCEDURE

1. Turn off the Invertec STT and disconnect main AC input power to the machine.
2. Using the 5/16" nut driver, remove the case wraparound cover.
3. Perform the ***Input Filter Capacitor Discharge Procedure.*** See the ***Maintenance*** section.

**⚠ WARNING**

**ELECTRIC SHOCK can kill.**

- Before continuing with the test procedure, perform the capacitor discharge procedure to avoid electric shock.

4. Locate the protection PC board just in front of the input rectifier and relay mountings.

**⚠ WARNING**

**ELECTRIC SHOCK can kill.**

- With input power ON, there are high voltages inside the machine. Do not reach into the machine or touch any internal part.

5. Apply the correct input power and turn the machine ON.
6. Test for approximately 1VDC from plug J8 pin 1 (lead #311)(+) to plug J8 pin 3 (lead #313) (-). See Figure F.17.
   A. If approximately 1VDC is present, the protection PC board is functioning properly.
   B. If more than 5 VDC is measured, perform the ***Capacitor Balance Test.***



Return to Section TOC
Return to Master TOC

## PROTECTION BOARD TEST (continued)

**FIGURE F.18 - LEADS #309, #309A AT CR1, CR2 RELAYS**

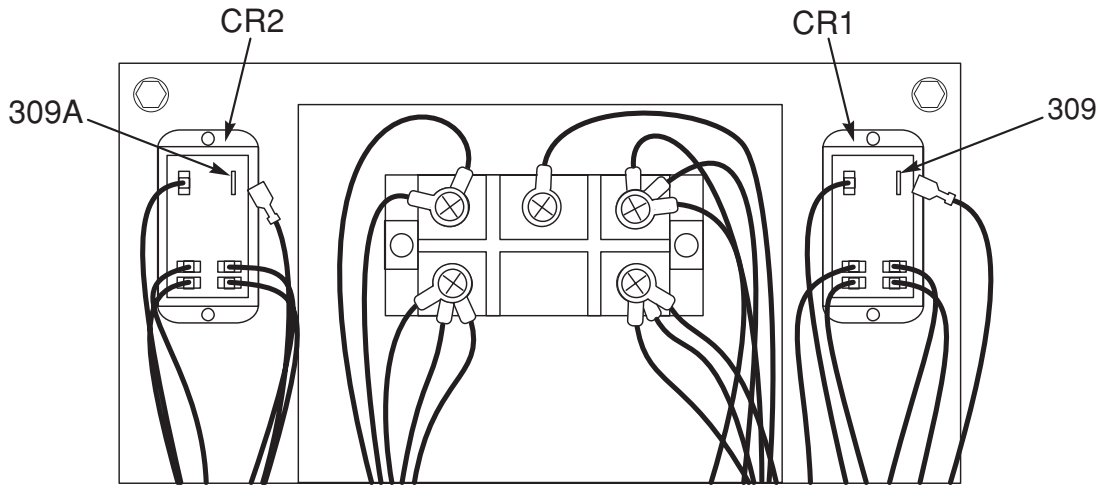


7. If the ***Capacitor Balance Test*** is OK and more than 5VDC is present at leads #311 to #313 (Step 6), the protection PC board may be faulty.

**NOTE:** The above voltage checks pertain only to the over voltage signal from the protection PC board to the power PC board. The capacitor precharge circuits are also incorporated within the protection PC board. If the problem has not been identified, carefully proceed with the following steps.

8. Remove input power to the Invertec STT machine.
9. Perform the ***Input Filter Capacitor Discharge Procedure.*** See the ***Maintenance*** section.

**⚠ WARNING**

**ELECTRIC SHOCK can kill.**

- Before continuing with the test procedure, perform the capacitor discharge procedure to avoid electric shock.

10. Locate and remove leads #309 and #309A from CR1 and CR2 relays. See Figure F.18.

**⚠ WARNING**

**ELECTRIC SHOCK can kill.**

- With input power ON, there are high voltages inside the machine. Do not reach into the machine or touch any internal part.

11. Apply correct input power and turn ON the machine.
12. Check for approximately 12VDC from plug J15 pin 1 (lead #314)(+) to plug J15 pin 4 (lead#315) (-). See ***Figure F.17.***
13. Check for approximately 12VDC from plug J15 pin 3 (lead #316)(+) to plug J15 pin 6 (lead#317) (-). See ***Figure F.17.***
14. If a low voltage is present in either steps 12 or 13 (approximately 1VDC), perform the ***Capacitor Balance Test.***
15. If the ***Capacitor Balance Test*** is OK, the protection PC board may be faulty.
16. Be certain to replace leads #309 and #309A onto the CR1 and CR2 relays.
17. After all tests are completed, install the case wraparound cover.



Return to Section TOC
Return to Master TOC

# NOTES

F-48

Return to Section TOC
Return to Master TOC
Return to Section TOC
Return to Master TOC
Return to Section TOC
Return to Master TOC
Return to Section TOC
Return to Master TOC

Return to Section TOC
Return to Master TOC
Return to Section TOC
Return to Master TOC
Return to Section TOC
Return to Master TOC
Return to Section TOC
Return to Master TOC

# TRIGGER CIRCUIT TEST

**⚠ WARNING**

Service and repair should be performed by only Lincoln Electric factory trained personnel. Unauthorized repairs performed on this equipment may result in danger to the technician or machine operator and will invalidate your factory warranty. For your safety and to avoid electrical shock, please observe all safety notes and precautions detailed throughout this manual.

If for any reason you do not understand the test procedures or are unable to perform the test/repairs safely, contact the Lincoln Electric Service Department for electrical troubleshooting assistance before you proceed. Call 1-888-935-3877.

## TEST DESCRIPTION

This test includes a few quick checks to troubleshoot the machine trigger circuit. The Simplified Trigger Circuit Diagram will enable the technician to view the trigger circuit in an abbreviated, uncomplicated format.

## MATERIALS NEEDED

5/16" Nut driver
Volt/ohmmeter (Multimeter)
Wiring Diagram and board Schematics

Note: Component locations and disassembly procedures may vary slightly on STT II models

## TRIGGER CIRCUIT TEST (continued)

**FIGURE F.19 – PLUG J31 LOCATION**

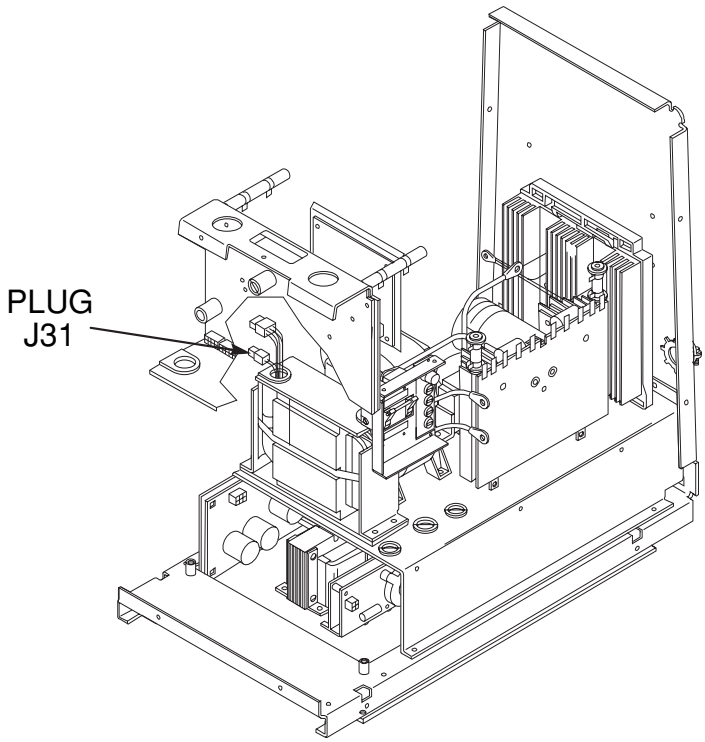


### TEST PROCEDURE

1. Turn off the Invertec STT and disconnect main AC input power to the machine.
2. Using the 5/16" nut driver, remove the case wraparound cover.
3. Perform the ***Input Filter Capacitor Discharge Procedure.*** See the ***Maintenance*** section.

**⚠ WARNING**

**ELECTRIC SHOCK can kill.**

- Before continuing with the test procedure, perform the capacitor discharge procedure to avoid electric shock.

4. Locate plug J31 at the left side of the machine. See Figure F.19.



Return to Section TOC
Return to Master TOC

## TRIGGER CIRCUIT TEST (continued)

**FIGURE F.20 – 14 PIN AMPHENOL AND PLUG J31 PIN ASSIGNMENTS**

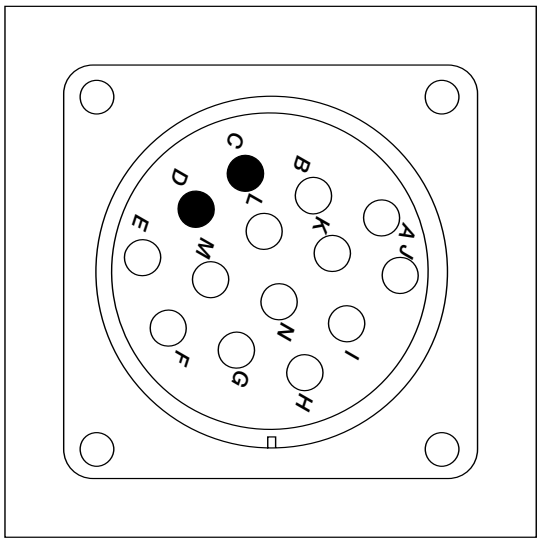


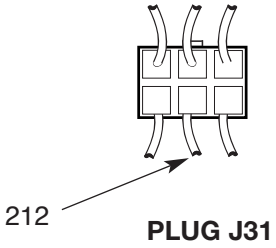


5. Using the ohmmeter check for approximately 3.5 ohms resistance from pin "D" of the 14 pin amphenol to plug J31 pin 2 (lead #212). See Figure F.20, and Figure F.22, ***Simplified Trigger Circuit Diagram.***

**FIGURE F.21 – CONTROL PC BOARD MOLEX PLUG**

6. Using the ohmmeter, check for approximately 3.5 ohms resistance from pin "C" of the 14 pin amphenol (see Figure F.20) to plug J4 pin 9 (lead#223) at the control PC board. See Figure F.21 and Figure F.22, ***Simplified Trigger Circuit Diagram.***



Return to Section TOC
Return to Master TOC

## TRIGGER CIRCUIT TEST (continued)

**FIGURE F.22 – SIMPLIFIED TRIGGER CIRCUIT DIAGRAM**

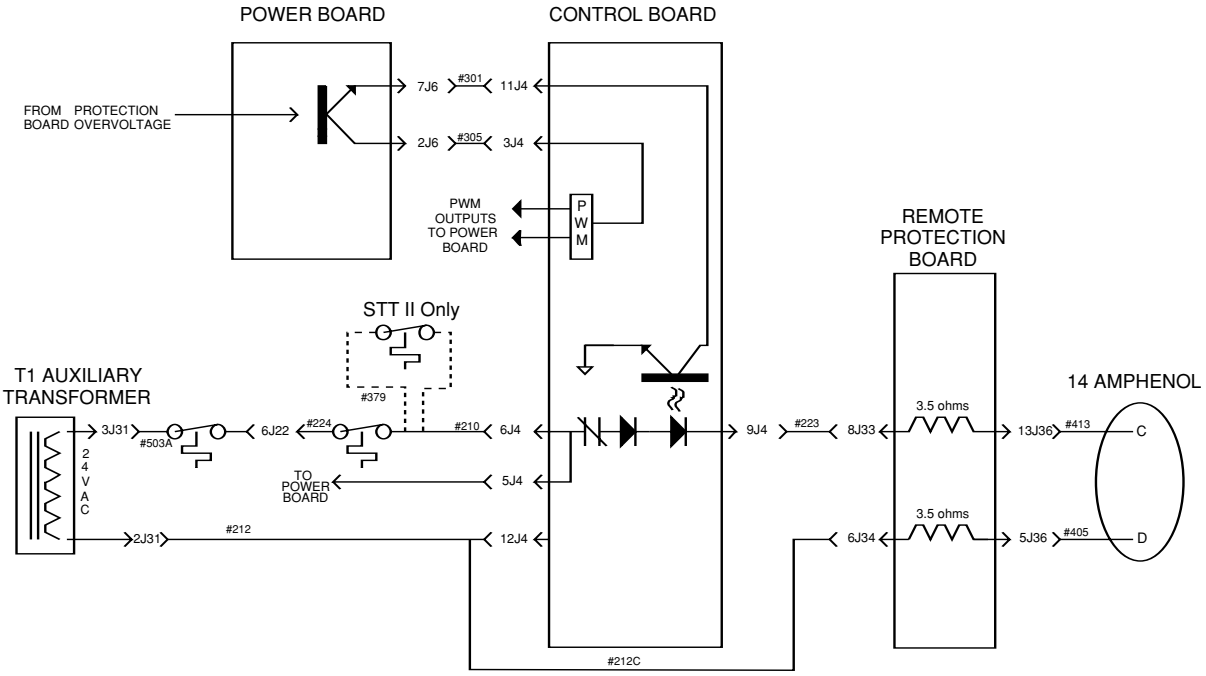


7. Using the ohmmeter check for continuity (zero ohms) from plug J31 pin 3 (lead#503A) to plug J4 pin 6 (lead#210). See Figure F.22, Simplified Trigger Circuit Diagram.
8. If any of the resistance checks are abnormally high in steps 5, 6 or 7, check for broken or loose wires, connections or "open" thermostats. Also check the small inductors on the Remote Protection Board. See Figure F.22, Simplified Trigger Circuit Diagram.

**⚠ WARNING**

**ELECTRIC SHOCK can kill.**

- With input power ON, there are high voltages inside the machine. Do not reach into the machine or touch any internal part.

9. Apply the correct input power to the machine and turn ON.
10. Locate plug J6 on the power PC board. See Figure F. 15. in the ***Power Board Test.***
11. Carefully check for approximately 1VDC from plug J6 pin 2 (lead #305)(+) to plug J6 pin 7 (lead #301) (-). If the approximately 1VDC is present the power PC board and protection PC board are functioning properly for the trigger circuit to operate. If the correct DC voltage is NOT present, perform the ***Protection Board Test*** and the ***Power Board Test.***
12. Test to make sure the T1 auxiliary transformer is producing 24VAC. See Figure F.22, Simplified Trigger Circuit Diagram.
13. If the above tests do not reveal the problem, the control PC board or associated wiring may be faulty. See Figure F.22, Simplified Trigger Circuit Diagram.



Return to Section TOC
Return to Master TOC

Return to Section TOC
Return to Master TOC

# IGBT MODULE
# REMOVAL AND REPLACEMENT

**⚠ WARNING**

Service and repair should be performed by only Lincoln Electric factory trained personnel. Unauthorized repairs performed on this equipment may result in danger to the technician or machine operator and will invalidate your factory warranty. For your safety and to avoid electrical shock, please observe all safety notes and precautions detailed throughout this manual.

If for any reason you do not understand the test procedures or are unable to perform the test/repairs safely, contact the Lincoln Electric Service Department for electrical troubleshooting assistance before you proceed. Call 1-888-935-3877.

## DESCRIPTION

The following procedure will aid the technician in the removal and replacement of the IGBT module located in the lower tray assembly.

## MATERIALS NEEDED

5/16" Nut driver
Phillips head screw driver
7/16" wrench
Needle nose pliers
1/2" Wrench
12mm Wrench
3/16" Allen type wrench
Dow Corning 340 Heat Sink Compound (Lincoln E1868).
Silicone Rubber RTV Coating (Lincoln E2861 or Dow 3140)

Note: Component locations and disassembly procedures may vary slightly on STT II models

Return to Section TOC
Return to Master TOC

# IGBT MODULE REMOVAL AND REPLACEMENT (continued)

**FIGURE F.23 – OUTPUT CHOKE LEAD DISCONNECTION**

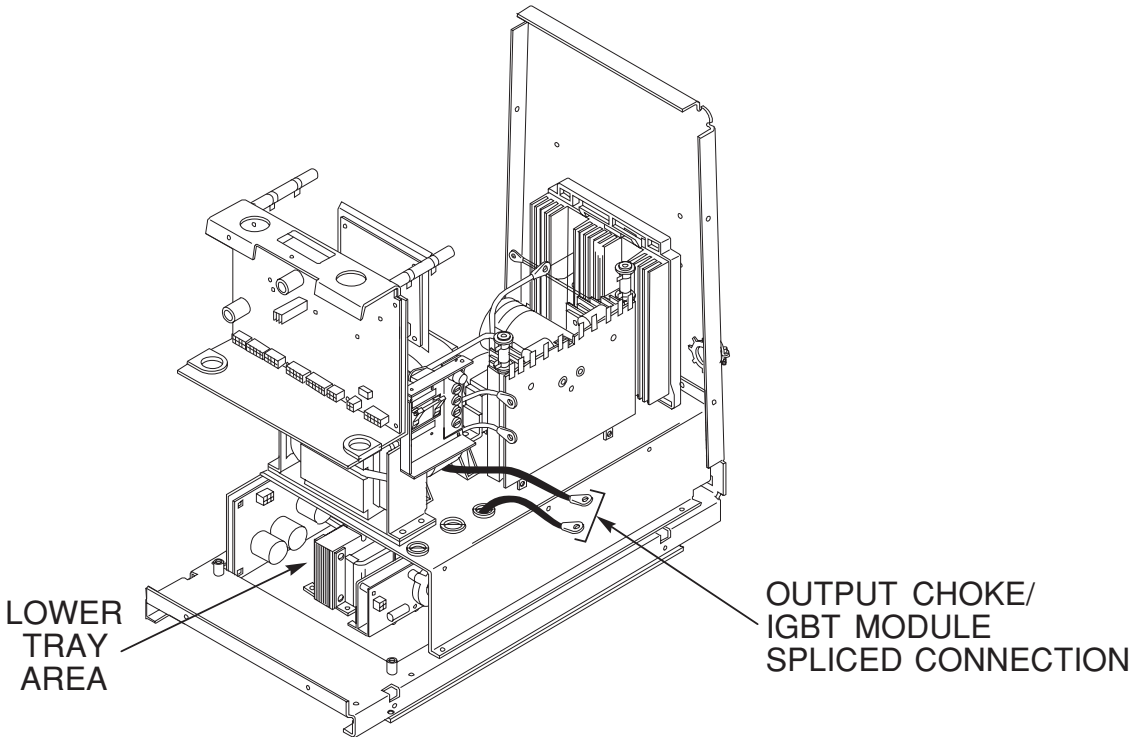


## PROCEDURE

1. Turn off the Invertec STT and disconnect main AC input power to the machine.
2. Using the 5/16" nut driver, remove the case wraparound cover.
3. Perform the ***Input Filter Capacitor Discharge Procedure.*** See the ***Maintenance*** section.

**⚠ WARNING**

**ELECTRIC SHOCK can kill.**

- Before continuing with the test procedure, perform the capacitor discharge procedure to avoid electric shock.

4. Locate the lead connection splice from the output choke to the IGBT module. Remove the insulating sleeve. Using the 7/16" wrench disconnect the lead splice. Thread the lower lead down into the lower tray assembly area. See Figure F.23.

Return to Section TOC
Return to Master TOC

## IGBT MODULE REMOVAL AND REPLACEMENT (continued)

**FIGURE F.24 – PLUG J1 DISCONNECTION**

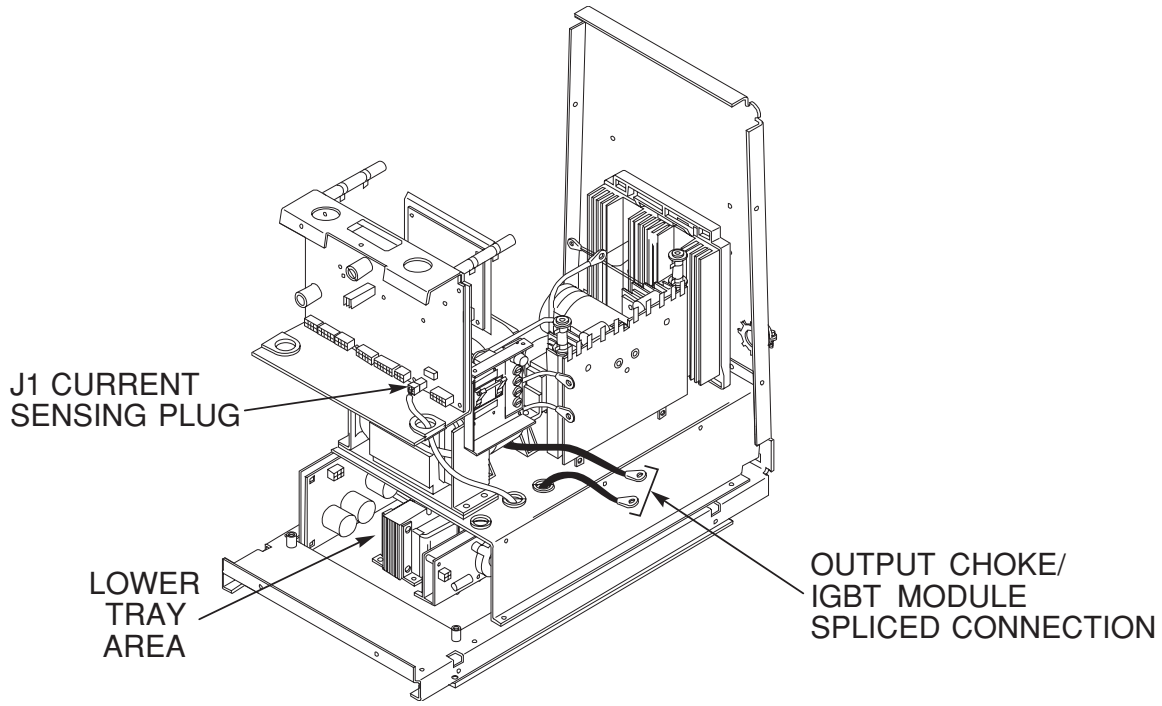


5. Disconnect the current sensing plug J1 from the control PC board. Carefully remove plug J1 and associated leads from the control PC board compartment. See Figure F.24.

**FIGURE F.25 – PLUG J22 DISCONNECTION**

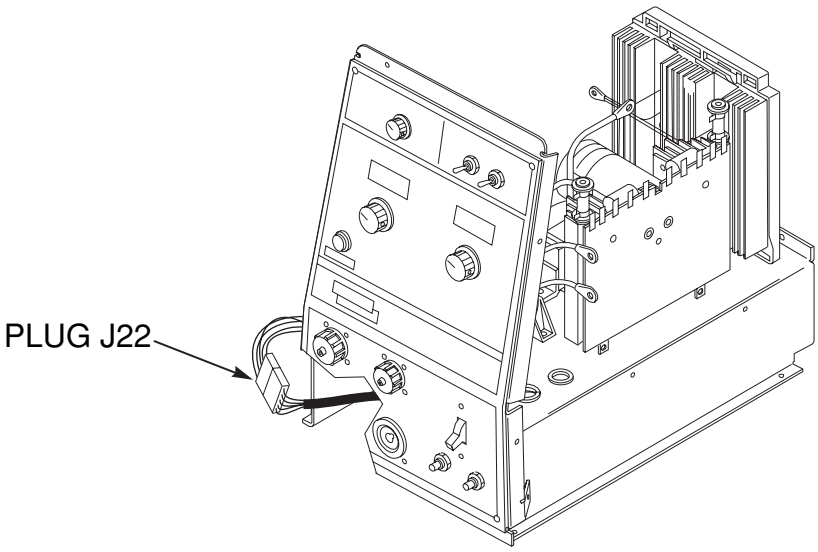


6. Locate and disconnect plug J22 from the wiring harness. See Figure F.25.

# IGBT MODULE REMOVAL AND REPLACEMENT (continued)

**FIGURE F.26 – STT PLACED ON ITS RIGHT SIDE**

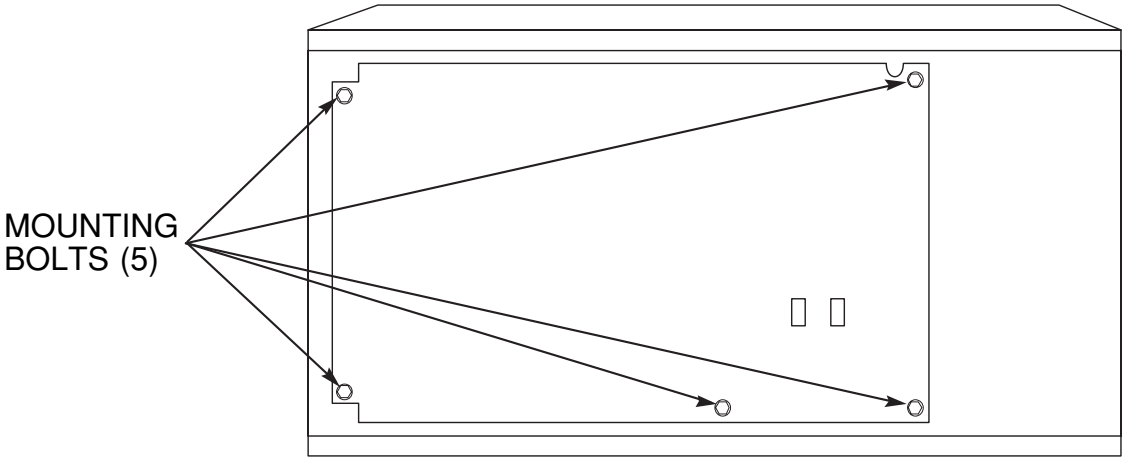


7. Carefully lift and tilt the Invertec STT machine onto its right side. See Figure F.26.
8. Using the 7/16" wrench, remove the five bolts holding the lower tray assembly to the case bottom.
9. Carefully slide out and support the lower tray assembly.
10. Using the needle nose pliers, remove the strain relief holding the J22 lead harness to the case bottom.
11. Using the 1/2" wrench, remove the IGBT cable from the negative output terminal.
12. Carefully remove the lower tray assembly clear from the machine.
13. Remove the rubber RTV coating from the IGBT module.



Return to Section TOC
Return to Master TOC

Return to Section TOC
Return to Master TOC

## IGBT MODULE REMOVAL AND REPLACEMENT (continued)

**FIGURE F.27 – IGBT MODULE CONNECTIONS**

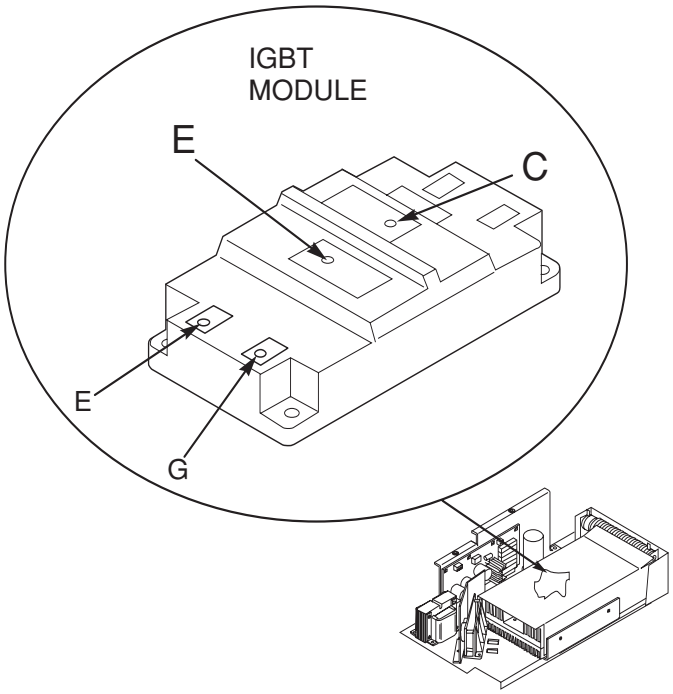


STT II

*For steps 14-18, see Figure F.27.*

14. Using the phillips head screw driver, remove the small leads from the small "E" and "B" terminals. Note lead placement for reassembly.
15. Using the 12mm wrench, remove the large lead and the #289 lead from the large "E" terminal. Note lead placement for reassembly.
16. Using the 12mm wrench, remove the large lead and the #287 lead from the large "C" terminal. Note lead placement for reassembly.
17. Using the 3/16" Allen type wrench, remove the four socket head cap screws that mount the module to the heat sink.
18. Carefully remove the IGBT module.
19. Upon reassembly, use Dow Corning 340 Heat Sink Compound (Lincoln E1868) between the module and the heat sink.
20. Mount the new module using the socket head cap screws and torque to 35 inch pounds.

**Note:** The torque should be rechecked after three hours.

21. Using the 12mm wrench, assemble the large lead and the smaller #289 lead to the large "E" terminal. Torque to 86 inch pounds.
22. Using the 12mm wrench, assemble the large lead and the smaller #287 lead to the large "C" terminal. Torque to 86 inch pounds.
23. Using the phillips head screw driver, reassemble the small leads to the small "E" and "G" terminals. Torque to 13 inch pounds.
24. Apply the Silicone Rubber RTV Coating (Lincoln E2861 or Dow 3140) to the terminals and lead connections as was previously removed.
25. Replace the lower tray assembly.
26. Connect plug J22 to the wiring harness and plug J1 to the control PC board.
27. Connect the lead splice between the output choke and the IGBT module.
28. Install the case wraparound cover.

# NOTES

F-58

Return to Section TOC
Return to Master TOC
Return to Section TOC
Return to Master TOC
Return to Section TOC
Return to Master TOC
Return to Section TOC
Return to Master TOC

Return to Section TOC
Return to Master TOC
Return to Section TOC
Return to Master TOC
Return to Section TOC
Return to Master TOC
Return to Section TOC
Return to Master TOC

# SWITCH BOARD REPLACEMENT

**⚠ WARNING**

Service and repair should be performed by only Lincoln Electric factory trained personnel. Unauthorized repairs performed on this equipment may result in danger to the technician or machine operator and will invalidate your factory warranty. For your safety and to avoid electrical shock, please observe all safety notes and precautions detailed throughout this manual.

If for any reason you do not understand the test procedures or are unable to perform the test/repairs safely, contact the Lincoln Electric Service Department for electrical troubleshooting assistance before you proceed. Call 1-888-935-3877.

## DESCRIPTION

This procedure will aid the technician in the removal and replacement of the switch boards.

## MATERIALS NEEDED

5/16" Nut driver
7/16" Wrench
3/16" Allen type wrench
3/16" Socket wrench
Dow Corning 340 Heat Sink Compound (Lincoln E1868)
ANALOG Ohmmeter

Note: Component locations and disassembly procedures may vary slightly on STT II models

## SWITCH BOARD REPLACEMENT (continued)

FIGURE F.28 – SWITCH BOARD REMOVAL

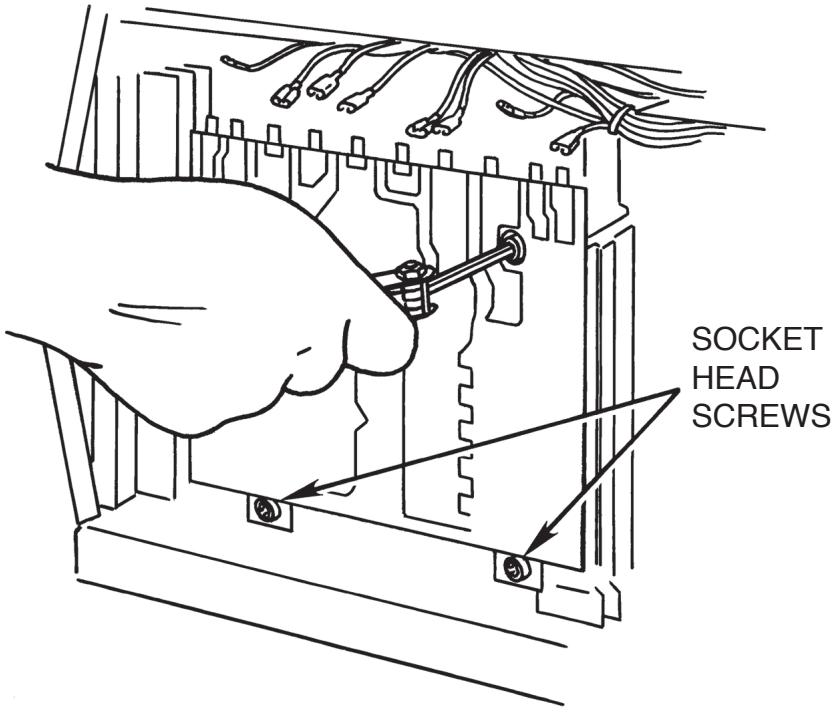


### PROCEDURE

**NOTE:** If a test indicates that a switch board is defective, both switch boards must be replaced at the same time. In addition to replacing the switch boards, replace capacitors C1 and C2 if the following conditions exist:

a. The machine was operating from 380 VAC or higher when the failure occurred.

b. Burned areas are visible on the switch boards.

1. Turn off the Invertec STT and disconnect main AC input power to the machine.
2. Using the 5/16" nut driver, remove the case wraparound cover.
3. Perform the ***Input Filter Capacitor Discharge Procedure.*** See the ***Maintenance*** section.

**⚠ WARNING**

**ELECTRIC SHOCK can kill.**

- Before continuing with the test procedure, perform the capacitor discharge procedure to avoid electric shock.

4. Carefully disconnect the leads at the top of the switch board.
5. Using the 3/16" socket wrench, remove the four cap screws from the switch board. See Figure F.28.



Return to Section TOC
Return to Master TOC

## SWITCH BOARD REPLACEMENT (continued)

6. Using the 7/16" wrench, remove the two hex head capacitor screws located in the center of the switch board. Hold the board firmly as you remove the screws.
7. Carefully remove the switch board.
8. Clean the heat sink surfaces thoroughly to remove all the heat sink compound. (During machine operation, this compound helps conduct heat from the switch board to the heat sinks.
9. Apply a thin layer (.002") of Dow Corning 340 Heat Sink Compound (Lincoln E1868) to the mounting surfaces of the new switch board and to the capacitor terminals. DO NOT allow the compound to enter the mounting screw holes. It can distort the torque values.
10. Prepare to mount the new switch board on the heat sink by first lining up the mounting holes. Then press the switch board into place.
11. Insert each of the four socket head screws into the mounting holes. Thread them finger tight. The threads are soft -- be careful no to cross-thread them.
12. Insert each of the two hex head screws into the capacitor terminal holes. Thread them finger tight. Be careful not to cross-thread the screws.
13. Torque both sets of screws in 10 inch-pound increments. Use a diagonal tightening sequence. Torque the four socket head screws to 44 inch-pounds (5 Nm). Torque the two hex head screws to 55 inch-pounds (6 Nm).

**⚠ CAUTION**

Failure to connect the switch board leads correctly can result in damage to the Invertec STT machine when power is applied.

14. Reconnect all the leads to the switch board. Be sure each lead is connected to the correct terminal.
15. Perform the ***Test after Repair of Switch Boards and/or Capacitors.***

**NOTE:** Always make sure that the switch boards are changed in matched pairs. Never mix an old style switch board (different part number) with new style (new part number).



Return to Section TOC
Return to Master TOC
Return to Section TOC
Return to Master TOC
Return to Section TOC
Return to Master TOC
Return to Section TOC
Return to Master TOC

Return to Section TOC
Return to Master TOC

## SWITCH BOARD REPLACEMENT (continued)

### TEST AFTER REPAIR OF SWITCH BOARDS AND/OR CAPACITORS

The following test must be performed after the switch boards and/or the capacitors have been replaced.

**NOTE:** Always make sure that switch boards are changed in matched pairs. Never mix an old style (different part number) switch board with a new style (new part number).

### TEST PROCEDURE

1. Turn main power OFF.
2. Perform ***Input Filter Capacitor Discharge Procedure.*** See the ***Maintenance*** section.

**⚠ WARNING**

**ELECTRIC SHOCK can kill.**

- Before continuing with the test procedure, perform the capacitor discharge procedure to avoid electric shock.

3. Connect a shorting conductor across terminals 14 and 53 of the protection PC board. See Figure F.29.
4. Set an ANALOG ohmmeter to X1000 range and place the probes on terminals 9 (+) and 12 (–) of one switch board. The meter will show the capacitors charging up and may take a minute or so to stabilize. The final meter reading should not exceed 8600 ohms (8.6 on the scale).
5. Test the other switch board the same way.

**NOTE:** Repeat the ***Input Filter Capacitor Discharge Procedure.***

6. Remove the shorting conductor set up in step 3.
7. Replace 20 amp fuses with 5-amp fuses in the input supply fuse holders.

**NOTE:** These fuses should be installed to protect against excessive current flow caused by a short circuit during the procedure.

**FIGURE F.29 — SHORTING TERMINALS 14 AND 53 OF PROTECTION BOARD**

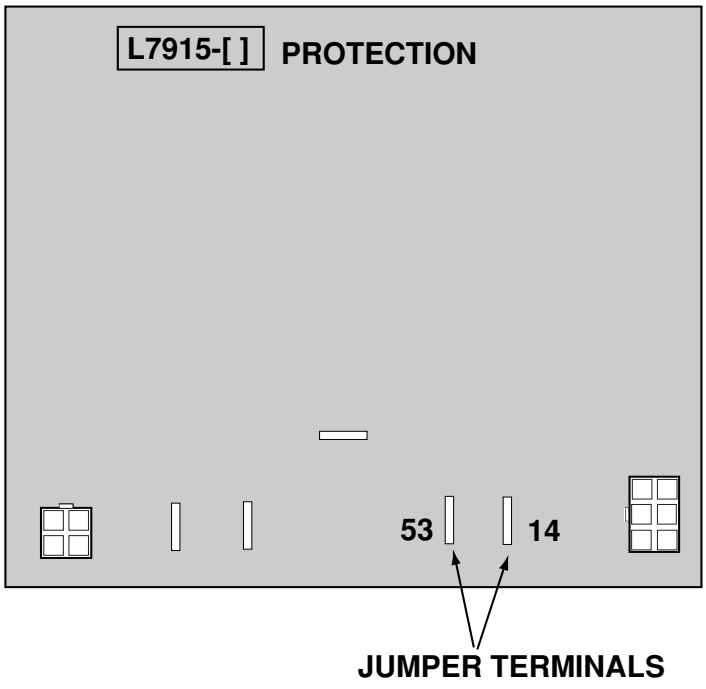

## SWITCH BOARD REPLACEMENT (continued)

**WARNING**

**ELECTRIC SHOCK can kill.**

- With input power ON, there are high voltages in the machine. Do not reach into the machine or touch any internal part.

8. With the machine connected for 440/460 volt operation and the proper input voltage applied, turn on input power to the machine.
9. With the output free of a load, check open circuit voltages of the output. Voltage should be 85 VDC maximum.
10. **Remove input power.** Then remove the 5-amp fuses from the input supply fuse holders.
11. Install 20-amp fuses and test under load.

**NOTE:** A resistive-type grid load bank is recommended.

14. Perform ***Retest After Repair.***



Return to Section TOC
Return to Master TOC
Return to Section TOC
Return to Master TOC
Return to Section TOC
Return to Master TOC
Return to Section TOC
Return to Master TOC

# NOTES

F-64

Return to Section TOC
Return to Master TOC
Return to Section TOC
Return to Master TOC
Return to Section TOC
Return to Master TOC
Return to Section TOC
Return to Master TOC

Return to Section TOC
Return to Master TOC
Return to Section TOC
Return to Master TOC
Return to Section TOC
Return to Master TOC
Return to Section TOC
Return to Master TOC

# CAPACITOR REMOVAL AND REPLACEMENT PROCEDURE

**⚠ WARNING**

Service and repair should be performed by only Lincoln Electric factory trained personnel. Unauthorized repairs performed on this equipment may result in danger to the technician or machine operator and will invalidate your factory warranty. For your safety and to avoid electrical shock, please observe all safety notes and precautions detailed throughout this manual.

If for any reason you do not understand the test procedures or are unable to perform the test/repairs safely, contact the Lincoln Electric Service Department for electrical troubleshooting assistance before you proceed. Call 1-888-935-3877.

## DESCRIPTION

This procedure will aid the technician in the removal and replacement of the input filter capacitors C1 and C2.

## MATERIALS NEEDED

5/16" Nut driver
Slot head screw driver
7/16" Wrench
Needle nose pliers
1/2" Wrench

Note: Component locations and disassembly procedures may vary slightly on STT II models

## CAPACITOR REMOVAL AND REPLACEMENT PROCEDURE (continued)

**FIGURE F.30 – OUTPUT CHOKE LEAD DISCONNECTION**

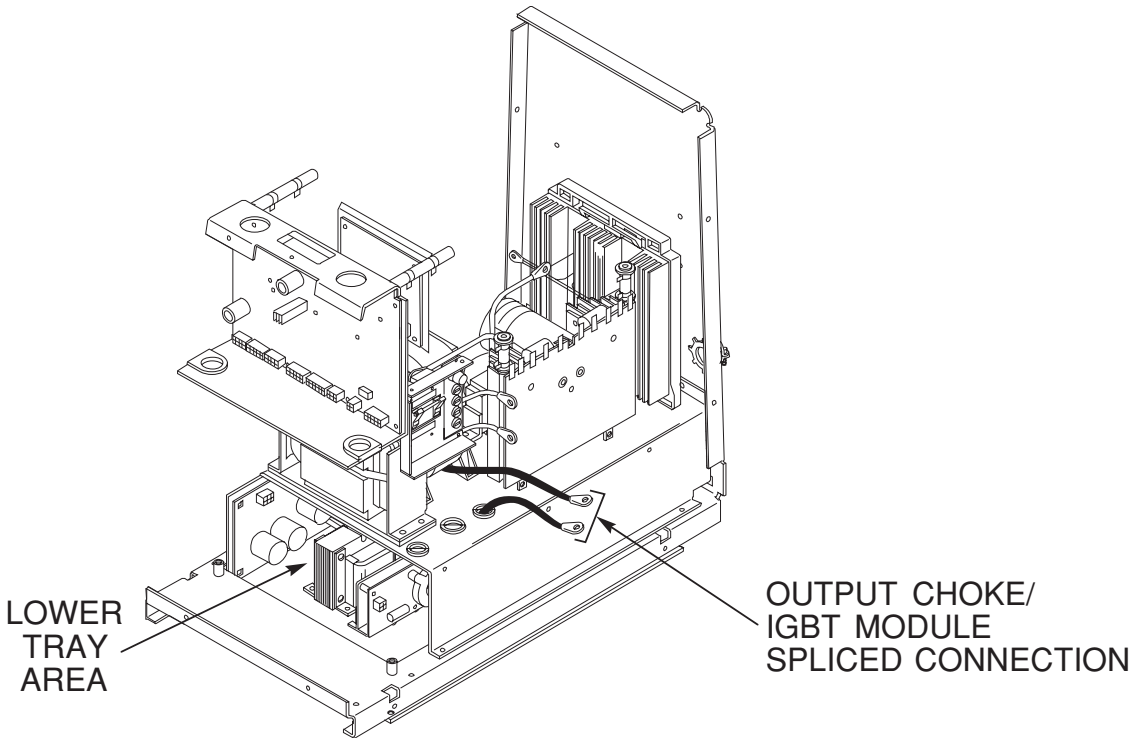


### PROCEDURE

1. Turn off Invertec STT and disconnect main AC input power to the machine.
2. Using the 5/16" nut driver, remove the case wraparound cover.
3. Perform the ***Input Filter Capacitor Discharge Procedure.*** See the ***Maintenance*** section.

**⚠ WARNING**

**ELECTRIC SHOCK can kill.**

- Before continuing with the test procedure, perform the capacitor discharge procedure to avoid electric shock.

4. Locate the lead connection splice from the output choke to the IGBT module. Remove the insulating sleeve. Using the 7/16" wrench disconnect the lead splice. Thread the lower lead down into the lower tray assembly area. See Figure F.30.



Return to Section TOC
Return to Master TOC

## CAPACITOR REMOVAL AND REPLACEMENT PROCEDURE (continued)

**FIGURE F.31 – PLUG J1 DISCONNECTION**

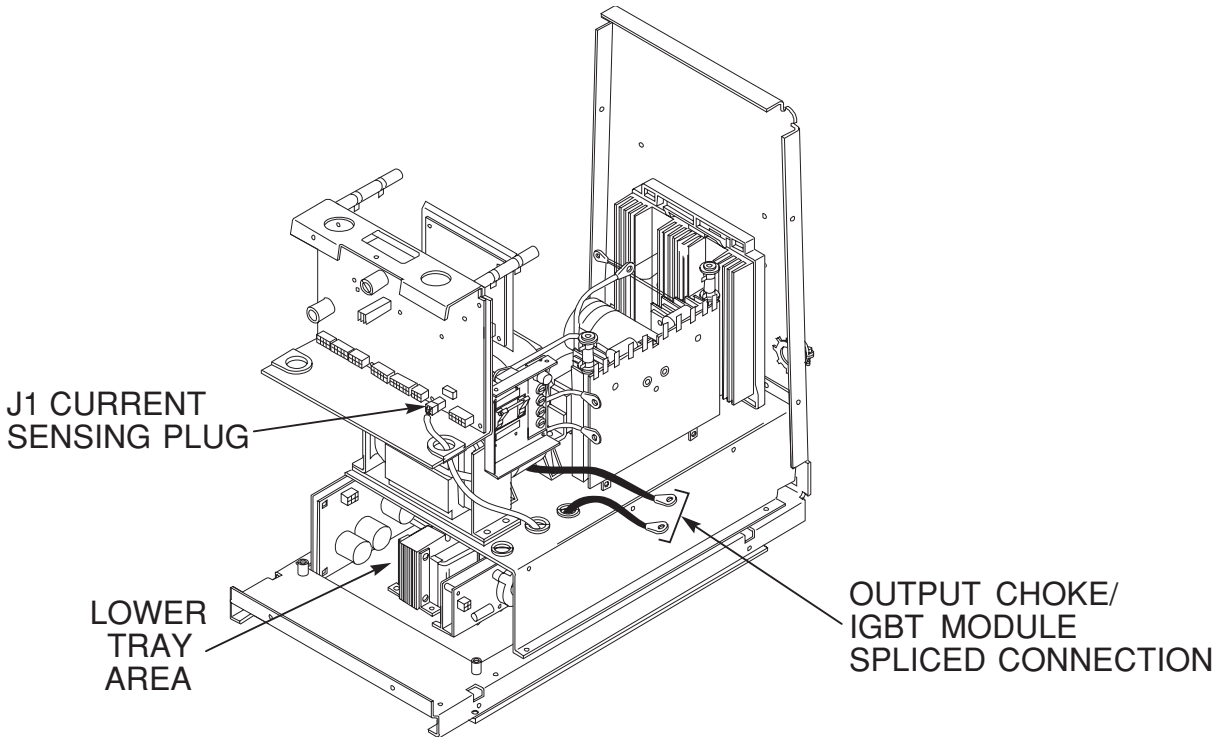


5. Disconnect the current sensing plug J1 from the control PC board. Carefully remove plug J1 and associated leads from the control PC board compartment.

**FIGURE F.32 – PLUG J22 DISCONNECTION**

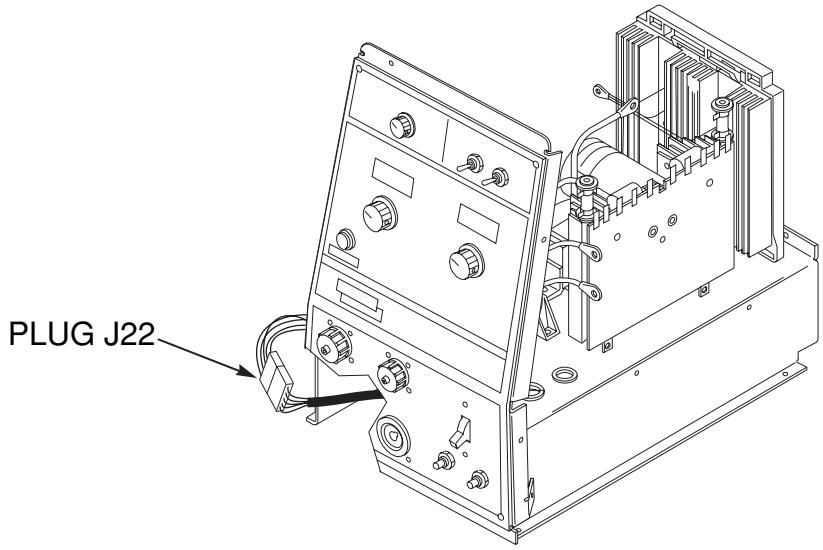


6. Locate and disconnect plug J22 from the wiring harness. See Figure F.32.



Return to Section TOC
Return to Master TOC

## CAPACITOR REMOVAL AND REPLACEMENT PROCEDURE (continued)

**FIGURE F.33 – STT PLACED ON ITS RIGHT SIDE**

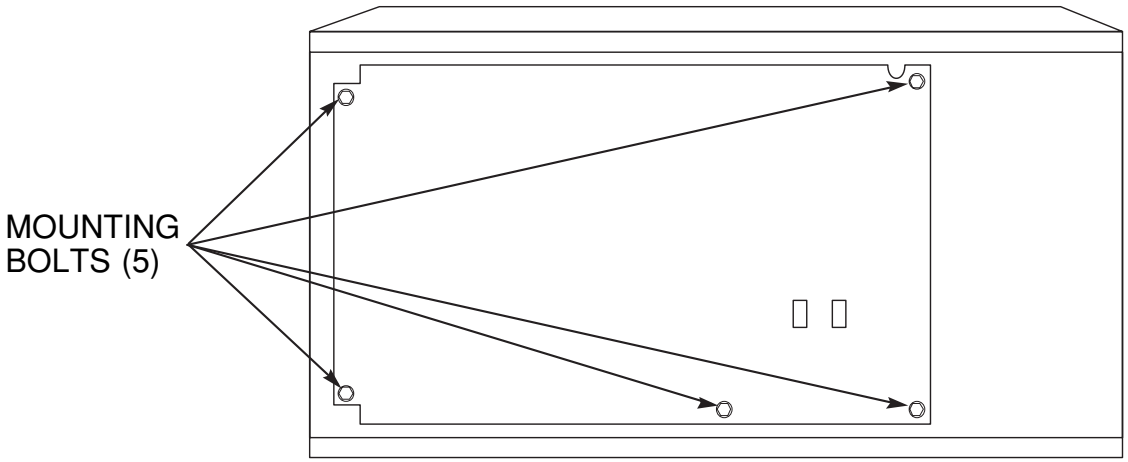


7. Carefully lift and tilt the Invertec STT machine onto its right side. See Figure F.33.
8. Using the 7/16" wrench, remove the five bolts holding the lower tray assembly to the case bottom.
9. Carefully slide out and support the lower tray assembly.
10. Using the needle nose pliers, remove the strain relief holding the J22 lead harness to the case bottom.
11. Using the 1/2" wrench, remove the IGBT cable from the negative output terminal.
12. Carefully remove the lower tray assembly clear from the machine and set aside.
13. Carefully disconnect the leads at the top of the switch board.



Return to Section TOC
Return to Master TOC
Return to Section TOC
Return to Master TOC
Return to Section TOC
Return to Master TOC
Return to Section TOC
Return to Master TOC

## CAPACITOR REMOVAL AND REPLACEMENT PROCEDURE (continued)

**FIGURE F.34 – REMOVING HEX HEAD NUTS OF THROUGH-BOLTS**

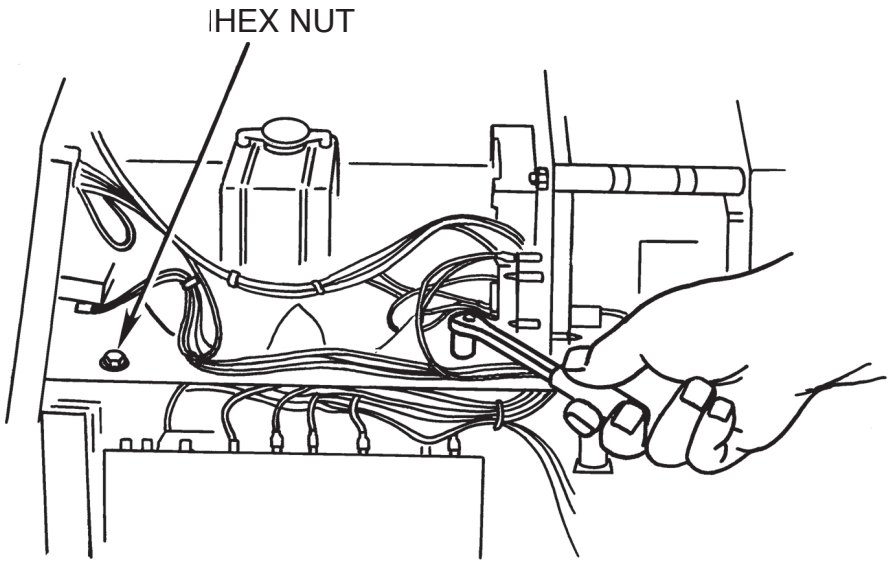


### CAPACITOR REPLACEMENT

**NOTE:** Capacitors must always be replaced in matched sets (C1 and C2 as a set).

When replacing Capacitors, remove the entire FET heat sink assembly, including the capacitors and switch board, as a unit.

Disassemble and reassemble only one unit at a time. Use the other unit as a model during reassembly so that all parts are reinstalled properly.

14. Remove the two 3/8" hex head nuts from the top of the through-bolts. The hex nuts are located on top of the fan shroud. See Figure F.34.



Return to Section TOC
Return to Master TOC

## CAPACITOR REMOVAL AND REPLACEMENT PROCEDURE (continued)

**FIGURE F.35 – REMOVING THROUGH-BOLTS**

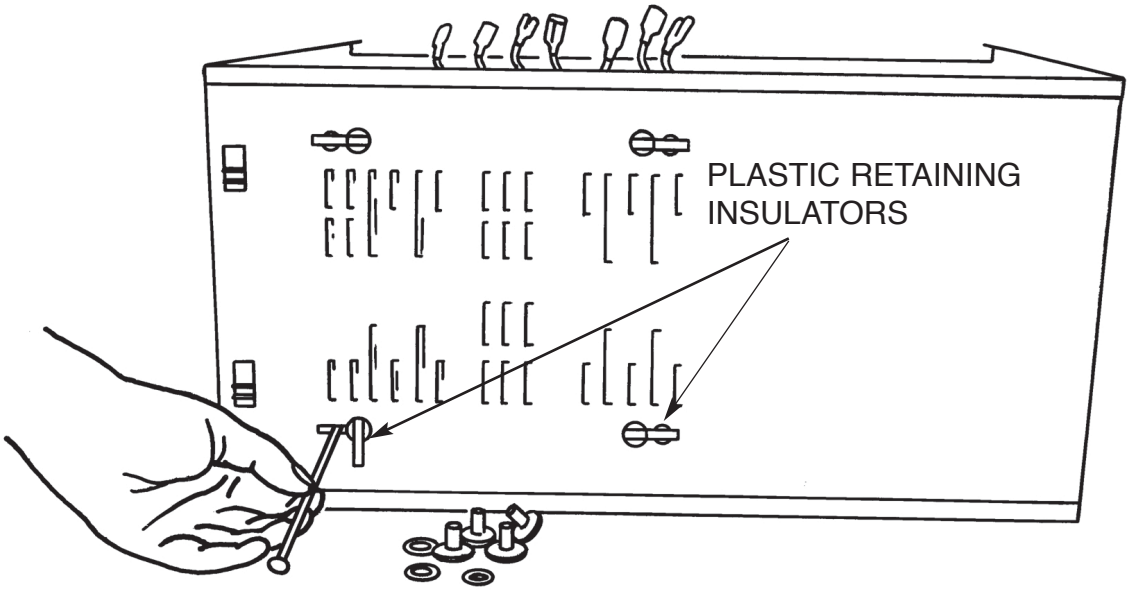


15. Place the machine on its side as shown in Figure F.35. Slide the plastic retaining insulators that go through the base of the machine to one side. Pull the through-bolts out of the machine, being careful to save all the insulation and standoff material. Set aside for reassembly.

16. Remove the switch board and capacitor assembly from the machine.



Return to Section TOC
Return to Master TOC
Return to Section TOC
Return to Master TOC
Return to Section TOC
Return to Master TOC
Return to Section TOC
Return to Master TOC

## CAPACITOR REMOVAL AND REPLACEMENT PROCEDURE (continued)

**FIGURE F.36 – REMOVING CAPACITOR NUTS**

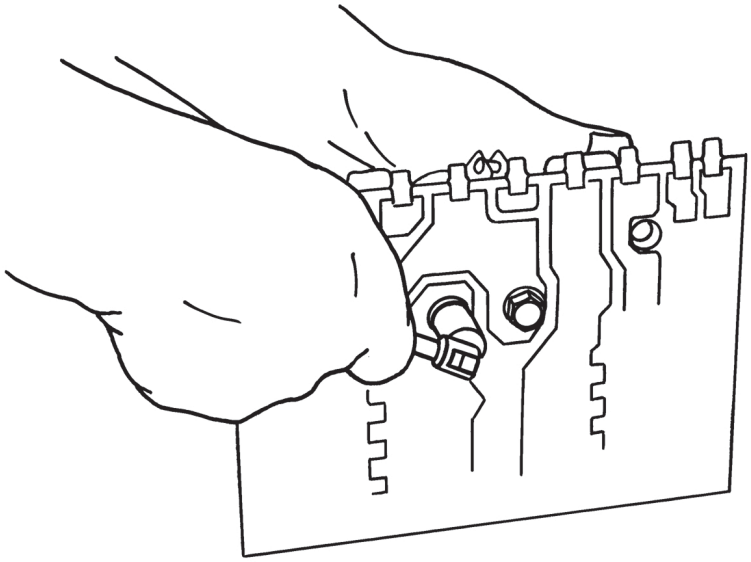

17. Remove the two 7/16” hex bolts that hold the capacitor to the switch board. See Figure F.36.
18. Loosen the set screw of the capacitor clamp ring and remove the capacitor from the clamp ring. See Figure F.37.

**FIGURE F.37 – LOOSENING THE CLAMP RING SET SCREW**

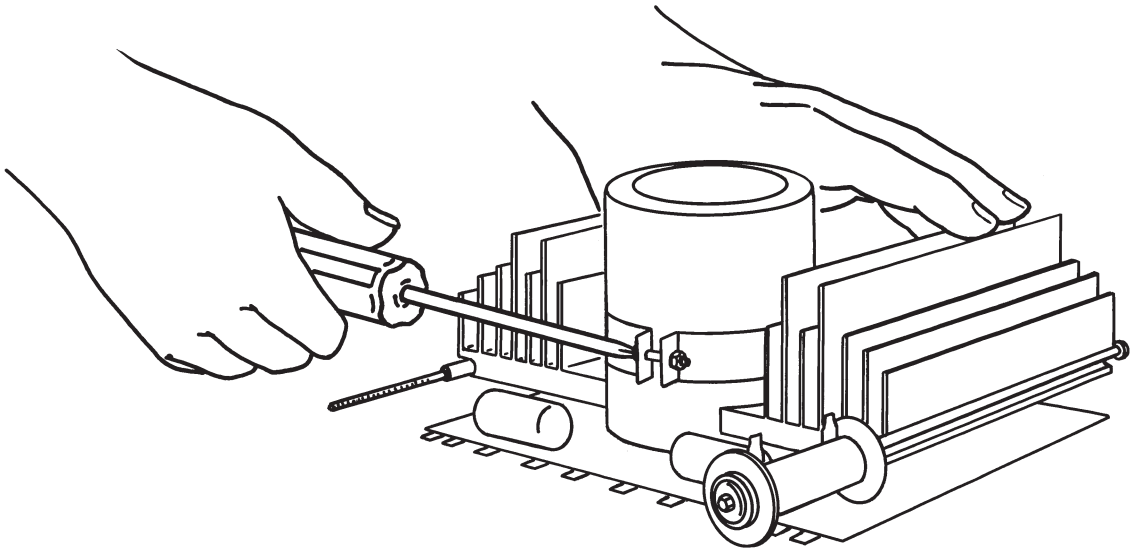

17. Remove the two 7/16” hex bolts that hold the capacitor to the switch board. See Figure F.36.
18. Loosen the set screw of the capacitor clamp ring and remove the capacitor from the clamp ring. See Figure F.37.



Return to Section TOC
Return to Master TOC
Return to Section TOC
Return to Master TOC
Return to Section TOC
Return to Master TOC
Return to Section TOC
Return to Master TOC

## CAPACITOR REMOVAL AND REPLACEMENT PROCEDURE (continued)

**FIGURE F.38 – COMPLETE SWITCH BOARD ASSEMBLY READY FOR INSTALLATION**

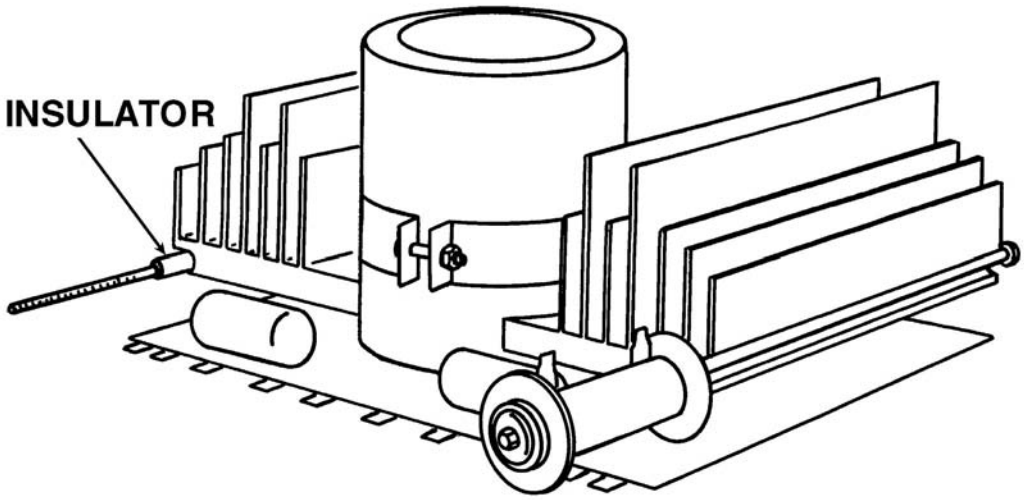


19. Install the new capacitor and tighten the two 7/16" hex bolts to a torque of 55 inch-pounds (6 Nm). Tighten these bolts in increments of 10 inch-pounds, alternating between the two bolts. Capacitor installation is complete. See Figure F.38.

**⚠ CAUTION**

Proper capacitor polarity must be noted when attaching the capacitor to the switch board assembly.

20. Install the switch board and capacitor assembly into the machine. Take special care that ALL insulators and sleevings are in their proper positions. See Figure F.38.
21. Install the lower tray assembly and all previously disconnected loads and plugs.
22. Perform the ***Test After Repair of Switch Boards and/or Capacitors.***

**NOTE:** Always make sure that the switch boards are changed in matched pairs. Never mix an old style switch board (different part number) with new style (new part number).

### INPUT FILTER CAPACITOR CONDITIONING

If the machine will not produce output when turned on and the following two conditions exist:

The machine is connected to operate at an input voltage of 380 VAC or higher and

Power has not been applied to the machine for a long period of time (many months). Then. . .

The Input Filter Capacitor Protection Circuit could have been activated and prevented output. This means the Input Filter Capacitors must be conditioned.

The Input Filter Capacitor Protection Circuit monitors the voltage across input filter capacitors C1 and C2. When it senses an overvoltage condition, the protection circuit will prevent the machine from operating.

To condition the Input Filter Capacitors:

1. Turn main power OFF.
2. Remove any load and do not load machine until conditioning procedure is complete.
3. Turn main power ON.
4. Let the unloaded machine sit for 30 minutes.
5. Turn main power OFF.
6. Turn main power ON.

**NOTE:** The machine should be ready to operate, and the protection circuit should have automatically reset once the capacitors have been conditioned and capacitor voltage has reached the acceptable operating level.



Return to Section TOC
Return to Master TOC

Return to Section TOC
Return to Master TOC

# OUTPUT RECTIFIER REMOVAL AND REPLACEMENT

**⚠ WARNING**

Service and repair should be performed by only Lincoln Electric factory trained personnel. Unauthorized repairs performed on this equipment may result in danger to the technician or machine operator and will invalidate your factory warranty. For your safety and to avoid electrical shock, please observe all safety notes and precautions detailed throughout this manual.

If for any reason you do not understand the test procedures or are unable to perform the test/repairs safely, contact the Lincoln Electric Service Department for electrical troubleshooting assistance before you proceed. Call 1-888-935-3877.

## DESCRIPTION

This procedure will aid the technician in the removal and replacement of the output diode heat sink assembly.

## MATERIALS NEEDED

5/16" Nut driver
3/8" Nut driver
7/16" Wrench
Slot head screw driver
Dow Corning 340 Heat Sink Compound (Lincoln E1868)

Note: Component locations and disassembly procedures may vary slightly on STT II models

Return to Section TOC
Return to Master TOC

## OUTPUT RECTIFIER REMOVAL AND REPLACEMENT (continued)

**FIGURE F.39 – CHOKE LEAD/HEAT SINK CONNECTION**

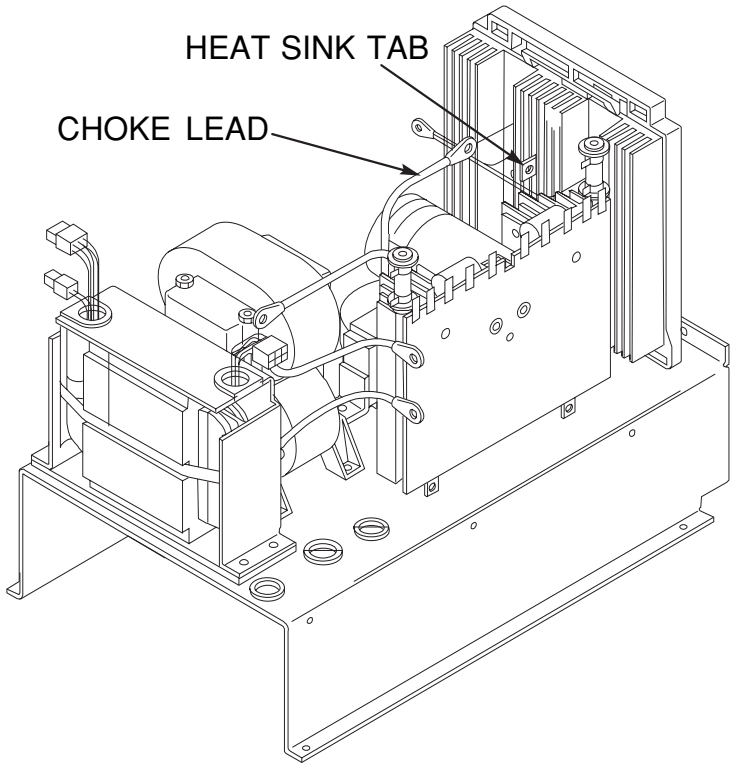


### PROCEDURE

1. Turn off Invertec STT and disconnect main AC input power to the machine.
2. Using the 5/16" nut driver, remove the case wraparound cover.
3. Perform the ***Input Filter Capacitor Discharge Procedure.*** See the ***Maintenance*** section.

**⚠ WARNING**

**ELECTRIC SHOCK can kill.**

- Before continuing with the test procedure, perform the capacitor discharge procedure to avoid electric shock.

4. Using the slot head screw driver, loosen the input cable strain relief.
5. Using the 5/16" nut driver, remove the four screws securing the case back to the internal horizontal baffles.
6. Carefully pull the case back away from the output rectifier assembly.

**NOTE:** The case back will NOT detach from the case bottom.

7. Using the 7/16" wrench, remove the four bolts and washers mounting the fan motor bracket to the top horizontal baffle. Carefully set the fan and motor assembly aside. Note insulation placement for reassembly.

**NOTE:** The fan motor leads do NOT have to be cut.

8. Using the 7/16" wrench, remove the choke lead from the heat sink tab. See Figure F.39.

## OUTPUT RECTIFIER REMOVAL AND REPLACEMENT (continued)

**FIGURE F.40 – MAIN TRANSFORMER DIODE CONNECTIONS**

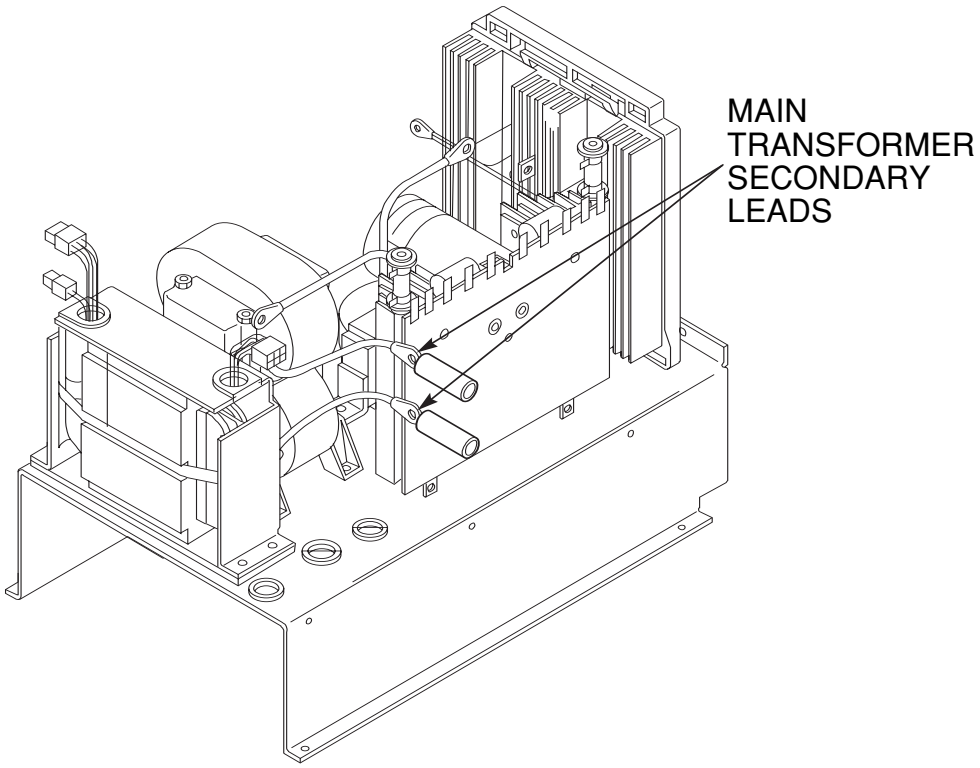


9. Remove the two sleevings from the diode connections at the main transformer. See Figure F.40.
10. Using the 7/16" wrench, remove the diode leads from the main transformer secondary leads. Note washer and lead placement for reassembly.



Return to Section TOC
Return to Master TOC

Return to Section TOC
Return to Master TOC

## OUTPUT RECTIFIER REMOVAL AND REPLACEMENT (continued)

**FIGURE F.41 – SWITCH BOARD/CAPACITOR ASSEMBLY THROUGH-BOLTS**

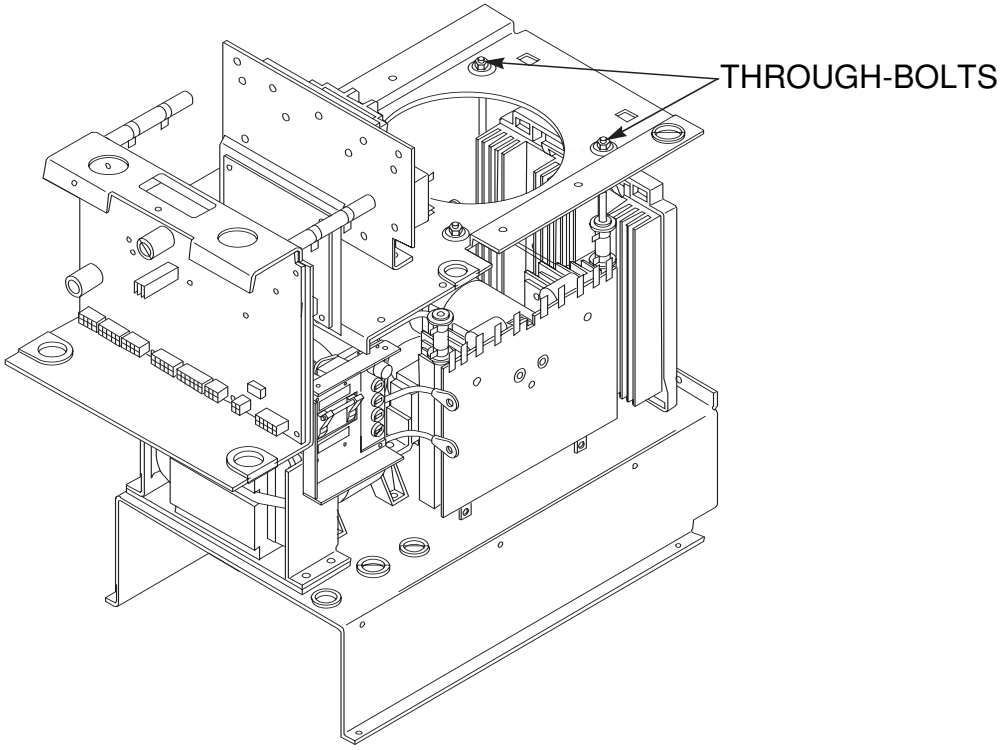


11. Using the 3/8" nut driver, remove the rear nuts and washers from the switch board/capacitor assembly through-bolts. See Figure F.41.
12. Using the 3/8" nut driver, loosen the front nuts from the switch board/capacitor assembly through-bolts.
13. Carefully lift the horizontal baffle away from the upper tabs of the output rectifier heat sink assembly.
14. Slide the heat sink assembly to the right (facing the back of the machine) to disengage the bottom tabs from the lower horizontal baffle.
15. Carefully remove the output rectifier heat sink assembly and leads from the STT machine.
16. Remove the nut that secures each diode that is to be replaced.

**NOTE:** The output diodes must be replaced in matched sets.

17. Before mounting the new diode sets, clean and brighten the mounting surfaces of both the diode sets and the heat sink with fine steel wool.
18. Apply an even coating of DOW Corning 340 Heat Sink Compound to the mounting surfaces of the diodes that contact the heat sink. This compound layer should be less than .001 inch thick. DO NOT apply the compound to the diode studs or mounting nut threads.
19. Insert the diode sets into the mounting hole and tighten the diode mounting nuts to a torque of 25 inch-pounds (3 Nm).
20. Replace the rectifier heat sink assembly, leads and connections that were previously removed. Install the fan and motor assembly (note insulation placement). Install the case back and the case wrap-around cover.

## RETEST AFTER REPAIR

Retest the INVERTEC STT:

- If it fails any test and the test requires removing or replacing any mechanical part that could affect the machine's electrical characteristics.

  OR

- If you repair or replace any electrical components.

### MAXIMUM INPUT IDLE AMPS AND IDLE WATTS

| | |
|---|---|
| INPUT CURRENT @ IDLE | 3.5 AMPS |
| INPUT POWER @ IDLE | 800 WATTS |

### MINIMUM ACCEPTABLE OUTPUT (AT MAXIMUM BACKGROUND SETTING) [STATIC GRID LOAD]

| CONTROL MODE | AMPS | VOLTS |
|---|---|---|
| BACKGROUND | 140 | 20 |

### OPEN CIRCUIT VOLTAGE RANGE

| |
|---|
| 73 TO 85 VDC |



Return to Section TOC
Return to Master TOC
Return to Section TOC
Return to Master TOC
Return to Section TOC
Return to Master TOC
Return to Section TOC
Return to Master TOC

Return to Section TOC
Return to Master TOC
Return to Section TOC
Return to Master TOC
Return to Section TOC
Return to Master TOC
Return to Section TOC
Return to Master TOC

## INPUT FILTER CAPACITOR CONDITIONING

If the machine will not produce output when turned on and the following two conditions exist:

The machine is connected to operate at an input voltage of 380 VAC or higher and

Power has not been applied to the machine for a long period of time (many months). Then. . .

The Input Filter Capacitor Protection Circuit could have been activated and prevented output. This means the Input Filter Capacitors must be conditioned.

The Input Filter Capacitor Protection Circuit monitors the voltage across input filter capacitors C1 and C2. When it senses an overvoltage condition, the protection circuit will prevent the machine from operating.

To condition the Input Filter Capacitors:

1. Turn main power OFF.
2. Remove any load and do not load machine until conditioning procedure is complete.
3. Turn main power ON.
4. Let the unloaded machine sit for 30 minutes.
5. Turn main power OFF.
6. Turn main power ON.

**NOTE:** The machine should be ready to operate, and the protection circuit should have automatically reset once the capacitors have been conditioned and capacitor voltage has reached the acceptable operating level.

## ENVIRONMENTAL PROTECTION

High voltage connections are covered with an RTV sealant to prevent malfunction in severe environments. Sealant must be applied to connections which have been opened or otherwise lost their protection. A non-corrosive, electronic grade sealant such as Dow Corning 3140, 3145, or 738; Columbus Adhesives 0172; or GE RTV-162 is recommended. Sealant may also be purchased from Lincoln Electric (order E2519 Silicone Rubber RTV Coating). Apply sealant after machine is repaired and tested. All five terminals of the input rectifier require this type of sealant.

# TABLE OF CONTENTS
# - ELECTRICAL DIAGRAMS SECTION -



**Electrical Diagrams .....Section G**

Wiring Diagram - Entire Machine - Codes 10151-10153 - (G2773) . . . . . .G-2
Wiring Diagram - Entire Machine - Codes 10381-10383 - (G3136) . . . . . .G-3
Wiring Diagram - Entire Machine - Codes 11090-11092 - (G4500) . . . . . .G-4
Wiring Diagram - Entire Machine - Codes 11115-11116 - (G4557) . . . . . .G-5
Schematic - Control PC Board - Codes 10151-11092 - (G2781 Sheet 1) . . . . . .G-6
Schematic - Control PC Board - Codes 10151-11092 - (G2781 Sheet 2) . . . . . .G-7
PC Board Assembly - Control - Codes 10151-11092 - (G2782) . . . . . .G-8
Schematic - Control PC Board - Codes 11115-11116 - (G4649 Sheet 1) . . . . . .G-9
Schematic - Control PC Board - Codes 11115-11116 - (G4649 Sheet 2) . . . . . .G-10
PC Board Assembly - Control - Codes 11115-11116 - (G4648) . . . . . .G-11
Schematic - Power PC Board - All Codes - (M16018) . . . . . .G-12
PC Board Assembly - Power - All Codes - (L8033) . . . . . .G-13
Schematic - Darlington Drive Board - Codes 10151-10383 - (M17581) . . . . . .G-14
PC Board Assembly - Darlington Drive - Codes 10151-10383 - (G2778) . . . . . .G-15
Schematic - IGBT Drive Board - Codes 11090-11116 - (L12144) . . . . . .G-16
PC Board Assembly - IGBT Drive - Codes 11090-11116 - (L12145) . . . . . .G-17
Schematic - Switch Board - All Codes - (L8440) . . . . . .G-18
PC Board Assembly - Switch - All Codes - (L8441) . . . . . .G-19
Schematic - Driver Board - All Codes - (S20799) . . . . . .G-20
PC Board Assembly - Driver - All Codes - (L9134) . . . . . .G-21
Schematic - Protection PC Board - Codes 10151-11092 - (M16097) . . . . . .G-22
PC Board Assembly - Protection - Codes 10151-11092 - (L7915) . . . . . .G-23
Schematic - Protection PC Board - Codes 11115-11116 - (M20352) . . . . . .G-24
PC Board Assembly - Protection - Codes 11115-11116 - (L12235) . . . . . .G-25
Schematic - Current Sense PC Board - All Codes - (S21410) . . . . . .G-26
PC Board Assembly - Current Sense - All Codes - (M17591) . . . . . .G-27
Schematic - Remote Protection PC Board - All Codes - (M17609) . . . . . .G-28
PC Board Assembly - Remote Protection - All Codes - (L9657) . . . . . .G-29



Return to Master TOC
Return to Master TOC
Return to Master TOC
Return to Master TOC

## Wiring Diagram - Entire Machine - Codes 10151 - 10153 - (G2773)

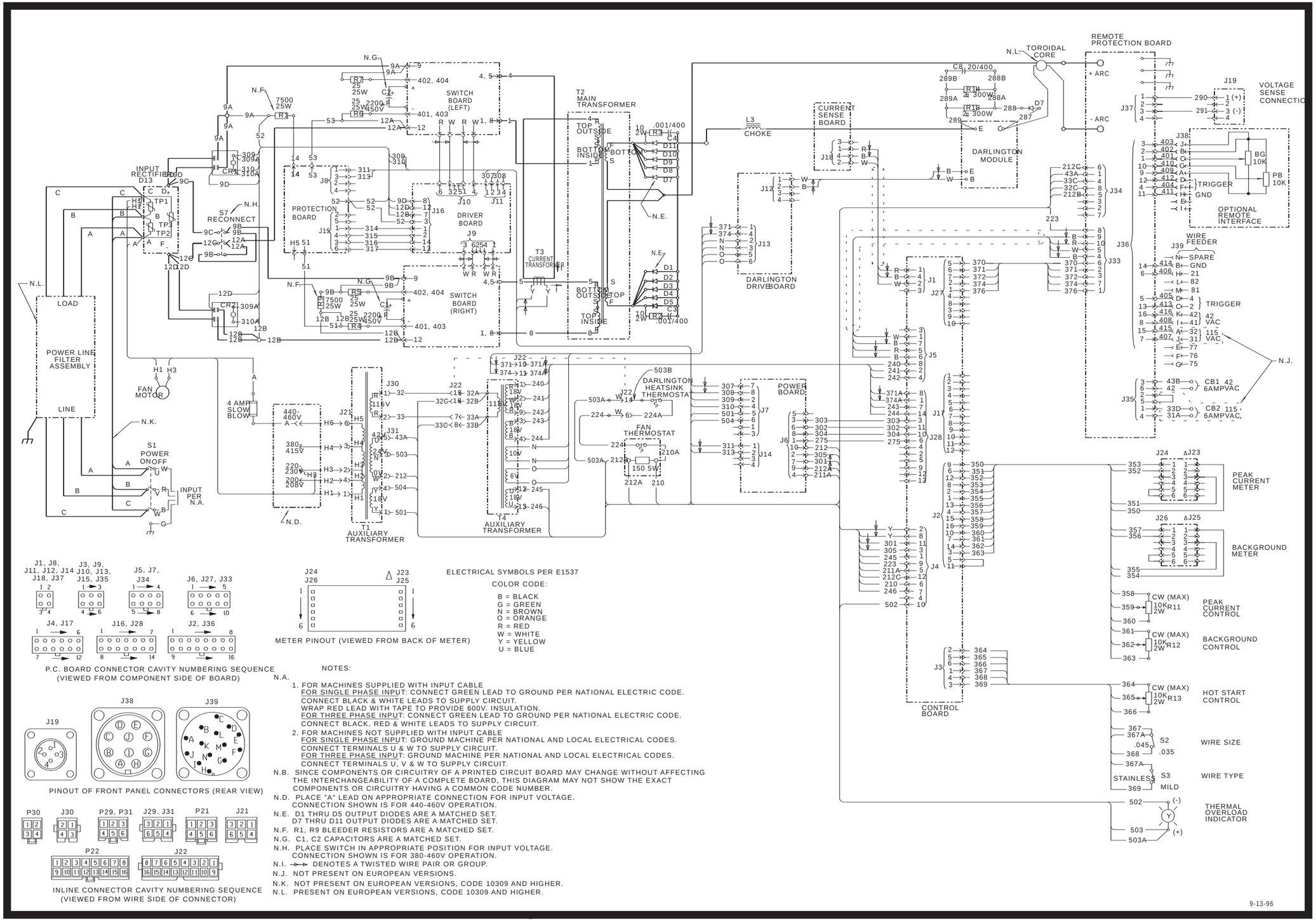


J1, J8, J11, J12, J14 J18, J37

J3, J9, J10, J13, J15, J35

J5, J7, J34

J6, J27, J33

J4, J17

J16, J28

J2, J36

P.C. BOARD CONNECTOR CAVITY NUMBERING SEQUENCE (VIEWED FROM COMPONENT SIDE OF BOARD)

J24 J26 J23 J25

METER PINOUT (VIEWED FROM BACK OF METER)

ELECTRICAL SYMBOLS PER E1537

COLOR CODE:

B = BLACK
G = GREEN
N = BROWN
O = ORANGE
R = RED
W = WHITE
Y = YELLOW
U = BLUE

J19

J38

J39

PINOUT OF FRONT PANEL CONNECTORS (REAR VIEW)

P30 J30 P29, P31 J29. J31 P21 J21

P22 J22

INLINE CONNECTOR CAVITY NUMBERING SEQUENCE (VIEWED FROM WIRE SIDE OF CONNECTOR)

NOTES:

N.A.
1. FOR MACHINES SUPPLIED WITH INPUT CABLE
   FOR SINGLE PHASE INPUT: CONNECT GREEN LEAD TO GROUND PER NATIONAL ELECTRIC CODE.
   CONNECT BLACK & WHITE LEADS TO SUPPLY CIRCUIT.
   WRAP RED LEAD WITH TAPE TO PROVIDE 600V. INSULATION.
   FOR THREE PHASE INPUT: CONNECT GREEN LEAD TO GROUND PER NATIONAL ELECTRIC CODE.
   CONNECT BLACK, RED & WHITE LEADS TO SUPPLY CIRCUIT.
2. FOR MACHINES NOT SUPPLIED WITH INPUT CABLE
   FOR SINGLE PHASE INPUT: GROUND MACHINE PER NATIONAL AND LOCAL ELECTRICAL CODES.
   CONNECT TERMINALS U & W TO SUPPLY CIRCUIT.
   FOR THREE PHASE INPUT: GROUND MACHINE PER NATIONAL AND LOCAL ELECTRICAL CODES.
   CONNECT TERMINALS U, V & W TO SUPPLY CIRCUIT.

N.B. SINCE COMPONENTS OR CIRCUITRY OF A PRINTED CIRCUIT BOARD MAY CHANGE WITHOUT AFFECTING THE INTERCHANGEABILITY OF A COMPLETE BOARD, THIS DIAGRAM MAY NOT SHOW THE EXACT COMPONENTS OR CIRCUITRY HAVING A COMMON CODE NUMBER.

N.D. PLACE "A" LEAD ON APPROPRIATE CONNECTION FOR INPUT VOLTAGE. CONNECTION SHOWN IS FOR 440-460V OPERATION.

N.E. D1 THRU D5 OUTPUT DIODES ARE A MATCHED SET.
D7 THRU D11 OUTPUT DIODES ARE A MATCHED SET.

N.F. R1, R9 BLEEDER RESISTORS ARE A MATCHED SET.

N.G. C1, C2 CAPACITORS ARE A MATCHED SET.

N.H. PLACE SWITCH IN APPROPRIATE POSITION FOR INPUT VOLTAGE. CONNECTION SHOWN IS FOR 380-460V OPERATION.

N.I. ⟷ DENOTES A TWISTED WIRE PAIR OR GROUP.

N.J. NOT PRESENT ON EUROPEAN VERSIONS.

N.K. NOT PRESENT ON EUROPEAN VERSIONS, CODE 10309 AND HIGHER.

N.L. PRESENT ON EUROPEAN VERSIONS, CODE 10309 AND HIGHER.

G2773

**NOTE:** This diagram is for reference only. It may not be accurate for all machines covered by this manual. The wiring diagram specific to your code is pasted inside one of the enclosure panels of your machine.



Return to Section TOC
Return to Master TOC

## Wiring Diagram - Entire Machine - Codes 10381 - 10383 - (G3136)

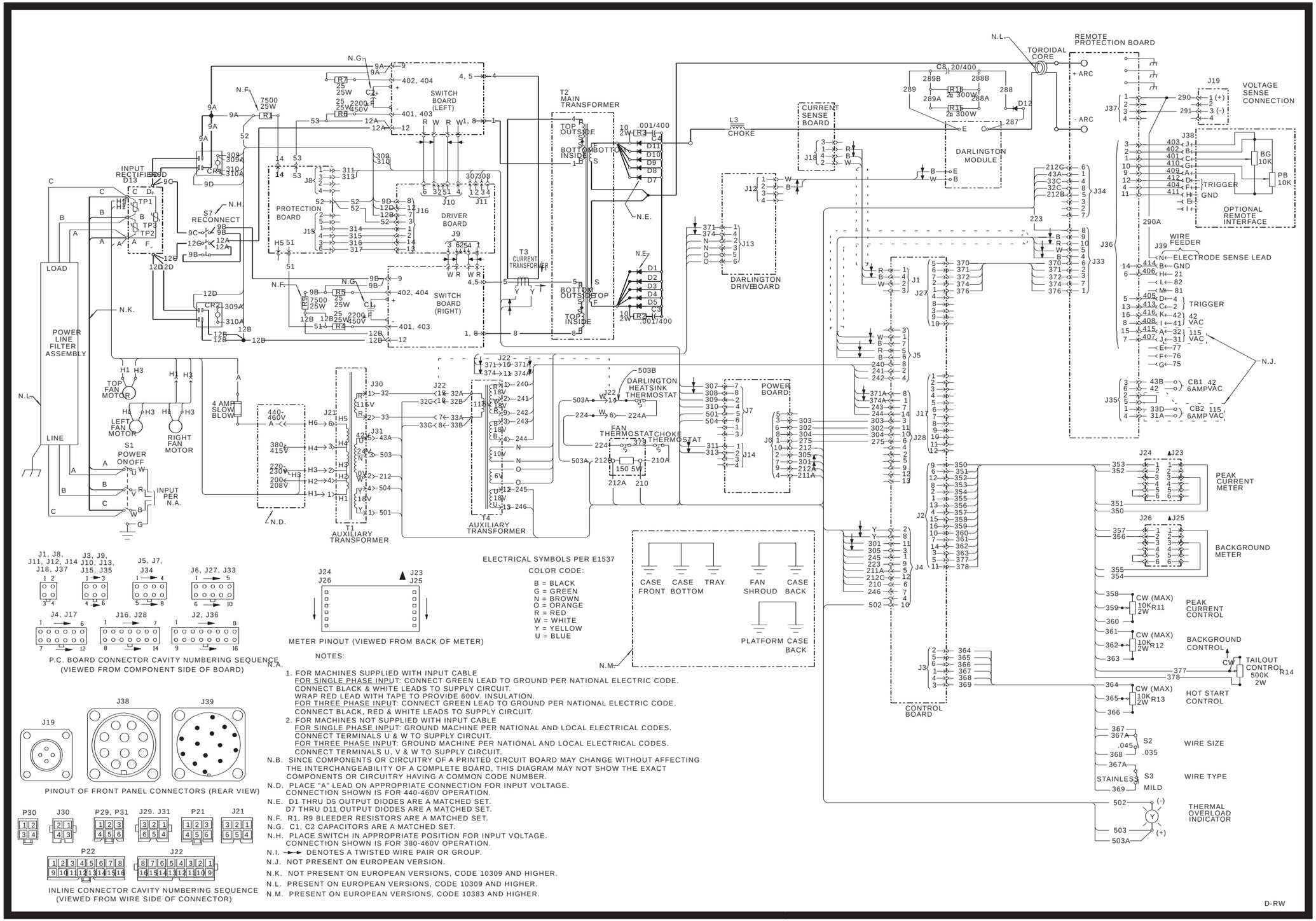


J1, J8, J11, J12, J14, J18, J37 — J3, J9, J10, J13, J15, J35 — J5, J7, J34 — J6, J27, J33

J4, J17 — J16, J28 — J2, J36

P.C. BOARD CONNECTOR CAVITY NUMBERING SEQUENCE (VIEWED FROM COMPONENT SIDE OF BOARD)

J24 J26 J23 J25

METER PINOUT (VIEWED FROM BACK OF METER)

ELECTRICAL SYMBOLS PER E1537

COLOR CODE:

B = BLACK
G = GREEN
N = BROWN
O = ORANGE
R = RED
W = WHITE
Y = YELLOW
U = BLUE

J19 J38 J39

PINOUT OF FRONT PANEL CONNECTORS (REAR VIEW)

P30 J30 P29, P31 J29. J31 P21 J21 P22 J22

INLINE CONNECTOR CAVITY NUMBERING SEQUENCE (VIEWED FROM WIRE SIDE OF CONNECTOR)

NOTES:

N.A.
1. FOR MACHINES SUPPLIED WITH INPUT CABLE
   FOR SINGLE PHASE INPUT: CONNECT GREEN LEAD TO GROUND PER NATIONAL ELECTRIC CODE.
   CONNECT BLACK & WHITE LEADS TO SUPPLY CIRCUIT.
   WRAP RED LEAD WITH TAPE TO PROVIDE 600V. INSULATION.
   FOR THREE PHASE INPUT: CONNECT GREEN LEAD TO GROUND PER NATIONAL ELECTRIC CODE.
   CONNECT BLACK, RED & WHITE LEADS TO SUPPLY CIRCUIT.
2. FOR MACHINES NOT SUPPLIED WITH INPUT CABLE
   FOR SINGLE PHASE INPUT: GROUND MACHINE PER NATIONAL AND LOCAL ELECTRICAL CODES.
   CONNECT TERMINALS U & W TO SUPPLY CIRCUIT.
   FOR THREE PHASE INPUT: GROUND MACHINE PER NATIONAL AND LOCAL ELECTRICAL CODES.
   CONNECT TERMINALS U, V & W TO SUPPLY CIRCUIT.

N.B. SINCE COMPONENTS OR CIRCUITRY OF A PRINTED CIRCUIT BOARD MAY CHANGE WITHOUT AFFECTING THE INTERCHANGEABILITY OF A COMPLETE BOARD, THIS DIAGRAM MAY NOT SHOW THE EXACT COMPONENTS OR CIRCUITRY HAVING A COMMON CODE NUMBER.

N.D. PLACE "A" LEAD ON APPROPRIATE CONNECTION FOR INPUT VOLTAGE. CONNECTION SHOWN IS FOR 440-460V OPERATION.

N.E. D1 THRU D5 OUTPUT DIODES ARE A MATCHED SET.
D7 THRU D11 OUTPUT DIODES ARE A MATCHED SET.

N.F. R1, R9 BLEEDER RESISTORS ARE A MATCHED SET.

N.G. C1, C2 CAPACITORS ARE A MATCHED SET.

N.H. PLACE SWITCH IN APPROPRIATE POSITION FOR INPUT VOLTAGE. CONNECTION SHOWN IS FOR 380-460V OPERATION.

N.I. ⟶⟵ DENOTES A TWISTED WIRE PAIR OR GROUP.

N.J. NOT PRESENT ON EUROPEAN VERSION.

N.K. NOT PRESENT ON EUROPEAN VERSIONS, CODE 10309 AND HIGHER.

N.L. PRESENT ON EUROPEAN VERSIONS, CODE 10309 AND HIGHER.

N.M. PRESENT ON EUROPEAN VERSIONS, CODE 10383 AND HIGHER.

D-RW

G3136

**NOTE:** This diagram is for reference only. It may not be accurate for all machines covered by this manual. The wiring diagram specific to your code is pasted inside one of the enclosure panels of your machine.



Return to Section TOC
Return to Master TOC

## Wiring Diagram - Entire Machine - Codes 11090 - 11092 - (G4500)

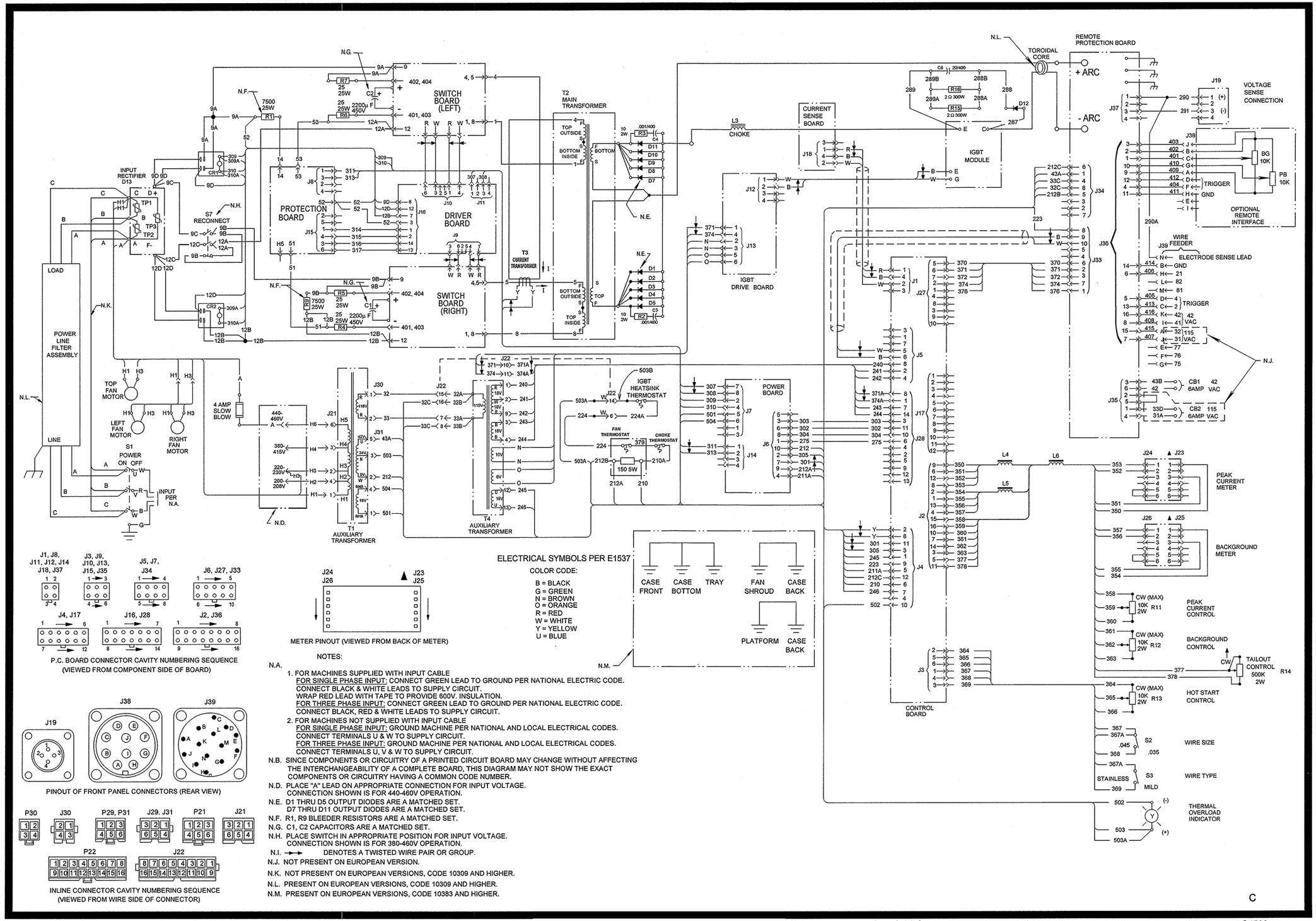


**NOTE:** This diagram is for reference only. It may not be accurate for all machines covered by this manual. The wiring diagram specific to your code is pasted inside one of the enclosure panels of your machine.



Return to Section TOC
Return to Master TOC

## Wiring Diagram - Entire Machine - Codes 11115 - 11116 - (G4557)

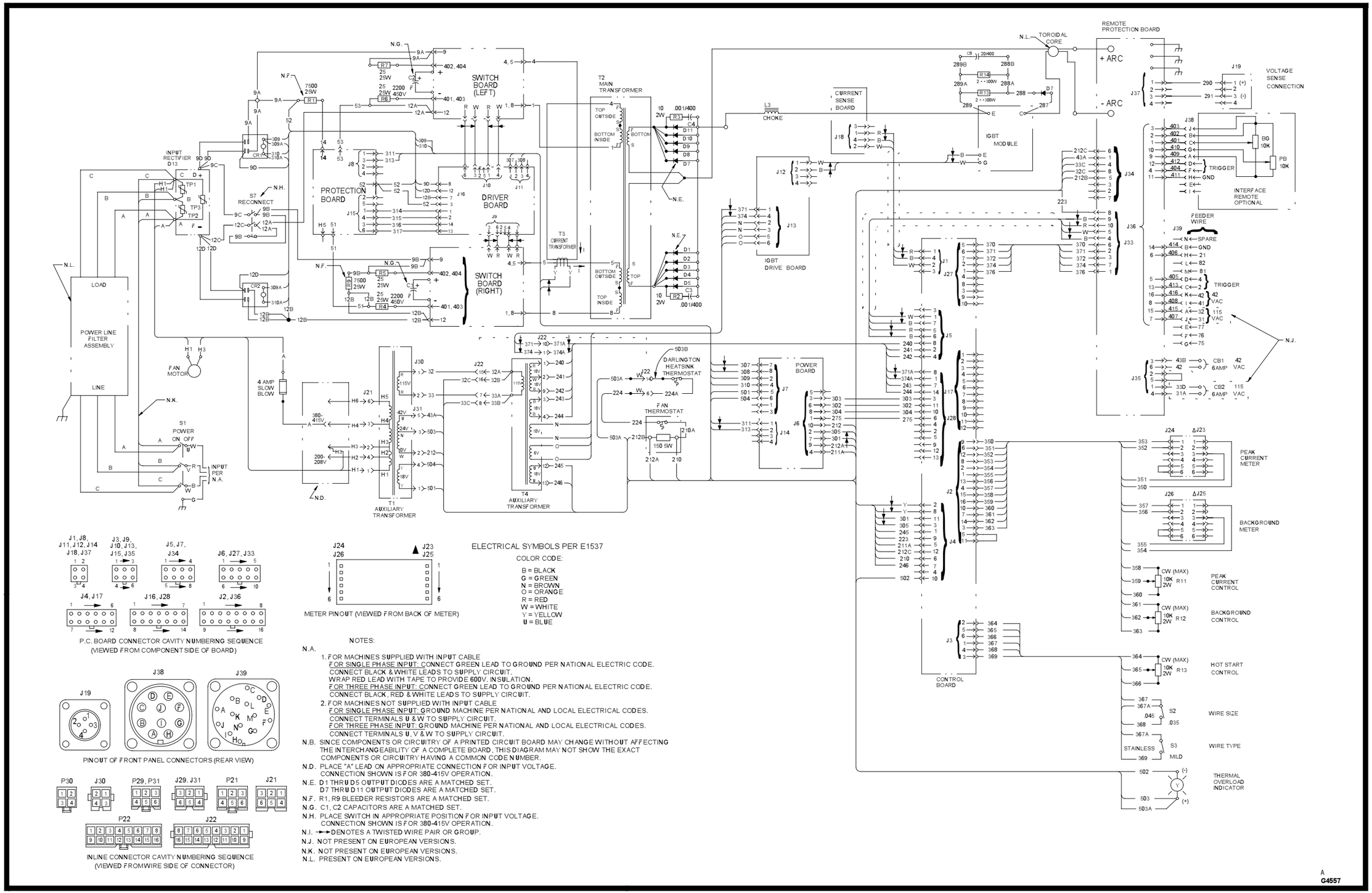


ELECTRICAL SYMBOLS PER E1537

COLOR CODE:

B = BLACK
G = GREEN
N = BROWN
O = ORANGE
R = RED
W = WHITE
Y = YELLOW
U = BLUE

NOTES:

N.A.
1. FOR MACHINES SUPPLIED WITH INPUT CABLE
   FOR SINGLE PHASE INPUT: CONNECT GREEN LEAD TO GROUND PER NATIONAL ELECTRIC CODE.
   CONNECT BLACK & WHITE LEADS TO SUPPLY CIRCUIT.
   WRAP RED LEAD WITH TAPE TO PROVIDE 600V. INSULATION.
   FOR THREE PHASE INPUT: CONNECT GREEN LEAD TO GROUND PER NATIONAL ELECTRIC CODE.
   CONNECT BLACK, RED & WHITE LEADS TO SUPPLY CIRCUIT.
2. FOR MACHINES NOT SUPPLIED WITH INPUT CABLE
   FOR SINGLE PHASE INPUT: GROUND MACHINE PER NATIONAL AND LOCAL ELECTRICAL CODES.
   CONNECT TERMINALS U & W TO SUPPLY CIRCUIT.
   FOR THREE PHASE INPUT: GROUND MACHINE PER NATIONAL AND LOCAL ELECTRICAL CODES.
   CONNECT TERMINALS U, V & W TO SUPPLY CIRCUIT.

N.B. SINCE COMPONENTS OR CIRCUITRY OF A PRINTED CIRCUIT BOARD MAY CHANGE WITHOUT AFFECTING THE INTERCHANGEABILITY OF A COMPLETE BOARD, THIS DIAGRAM MAY NOT SHOW THE EXACT COMPONENTS OR CIRCUITRY HAVING A COMMON CODE NUMBER.
N.D. PLACE "A" LEAD ON APPROPRIATE CONNECTION FOR INPUT VOLTAGE. CONNECTION SHOWN IS FOR 380-415V OPERATION.
N.E. D1 THRU D5 OUTPUT DIODES ARE A MATCHED SET. D7 THRU D11 OUTPUT DIODES ARE A MATCHED SET.
N.F. R1, R9 BLEEDER RESISTORS ARE A MATCHED SET.
N.G. C1, C2 CAPACITORS ARE A MATCHED SET.
N.H. PLACE SWITCH IN APPROPRIATE POSITION FOR INPUT VOLTAGE. CONNECTION SHOWN IS FOR 380-415V OPERATION.
N.J. ►►DENOTES A TWISTED WIRE PAIR OR GROUP.
N.J. NOT PRESENT ON EUROPEAN VERSIONS.
N.K. NOT PRESENT ON EUROPEAN VERSIONS.
N.L. PRESENT ON EUROPEAN VERSIONS.

A
G4557



Return to Section TOC Return to Master TOC

Return to Section TOC
Return to Master TOC

## Schematic - Control PC Board - Codes 10151 - 11092 - (G2781 Sheet 1 of 2)

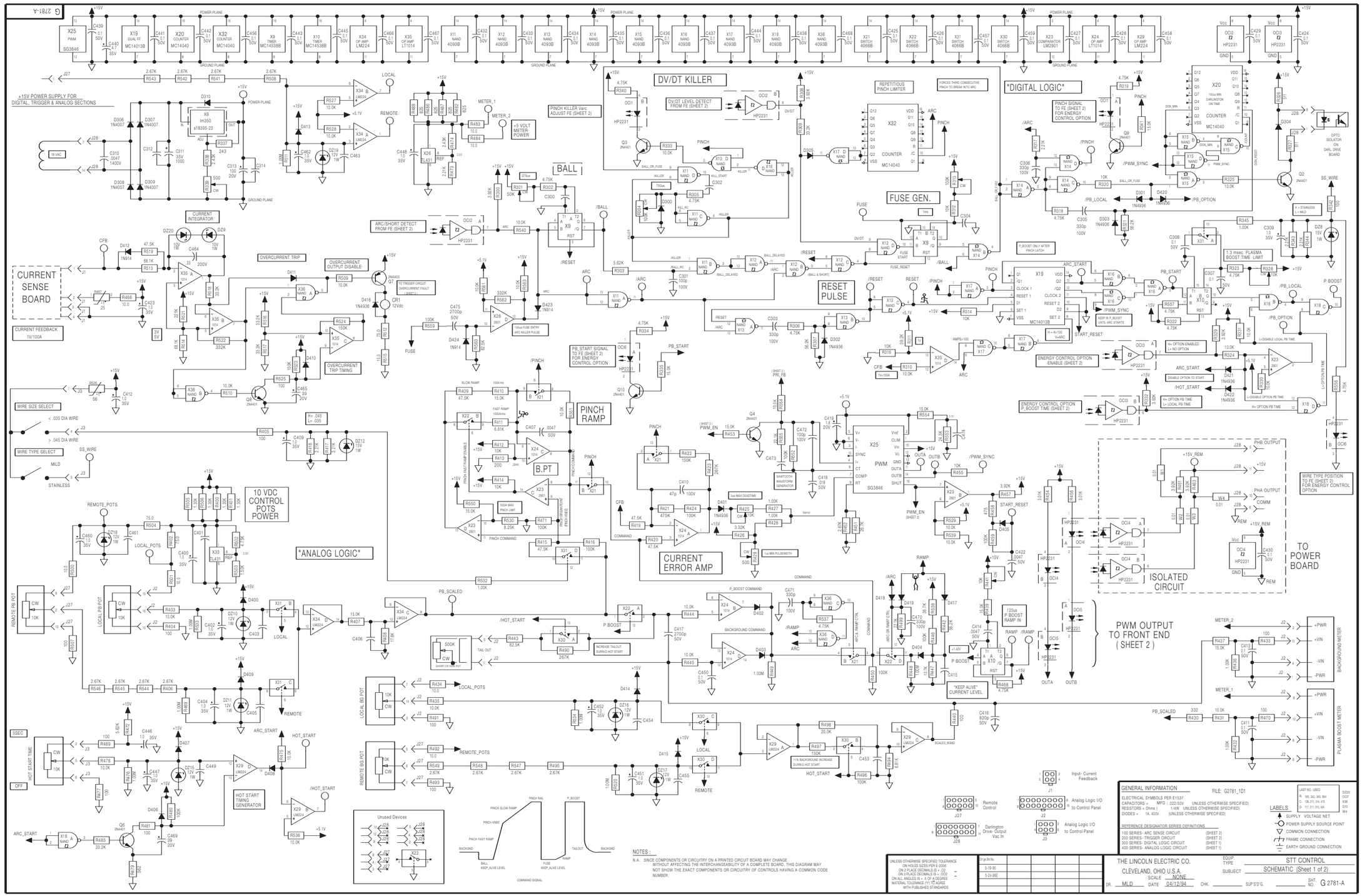


**NOTE:** Lincoln Electric assumes no responsibility for liablilities resulting from board level troubleshooting. PC Board repairs will invalidate your factory warranty. **Individual Printed Circuit Board Components are not available from Lincoln Electric.** This information is provided for reference only. Lincoln Electric discourages board level troubleshooting and repair since it may compromise the quality of the design and may result in danger to the Machine Operator or Technician. Improper PC board repairs could result in damage to the machine.

Return to Section TOC
Return to Master TOC
Return to Section TOC
Return to Master TOC
Return to Section TOC
Return to Master TOC
Return to Section TOC
Return to Master TOC



## Schematic - Control PC Board - Codes 10151 - 11092 - (G2781 Sheet 2 of 2)

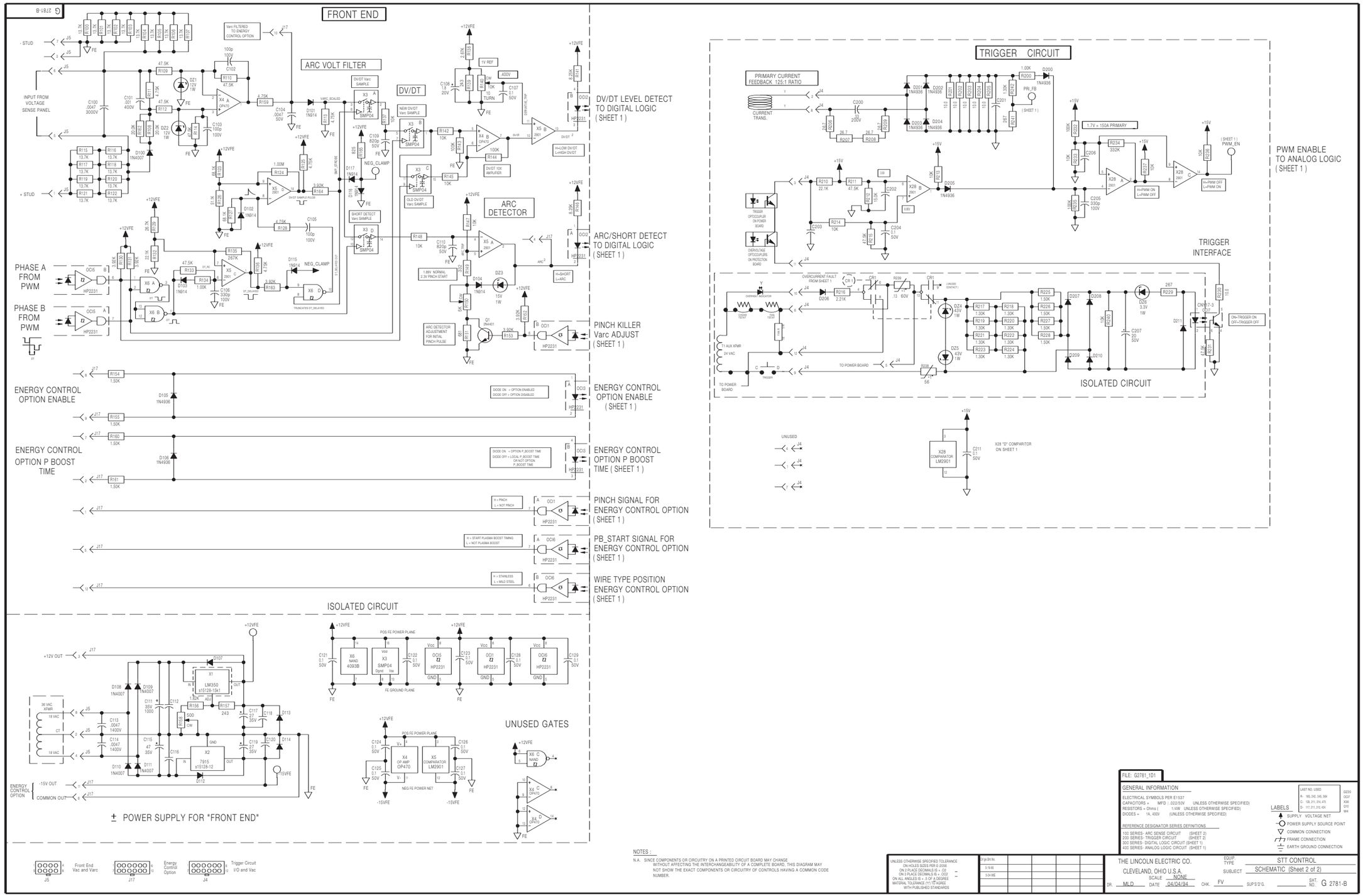


**NOTE:** Lincoln Electric assumes no responsibility for liablilities resulting from board level troubleshooting. PC Board repairs will invalidate your factory warranty. **Individual Printed Circuit Board Components are not available from Lincoln Electric.** This information is provided for reference only. Lincoln Electric discourages board level troubleshooting and repair since it may compromise the quality of the design and may result in danger to the Machine Operator or Technician. Improper PC board repairs could result in damage to the machine.

## PC Board Assembly - Control - Codes 10151 - 11092 - (G2782)

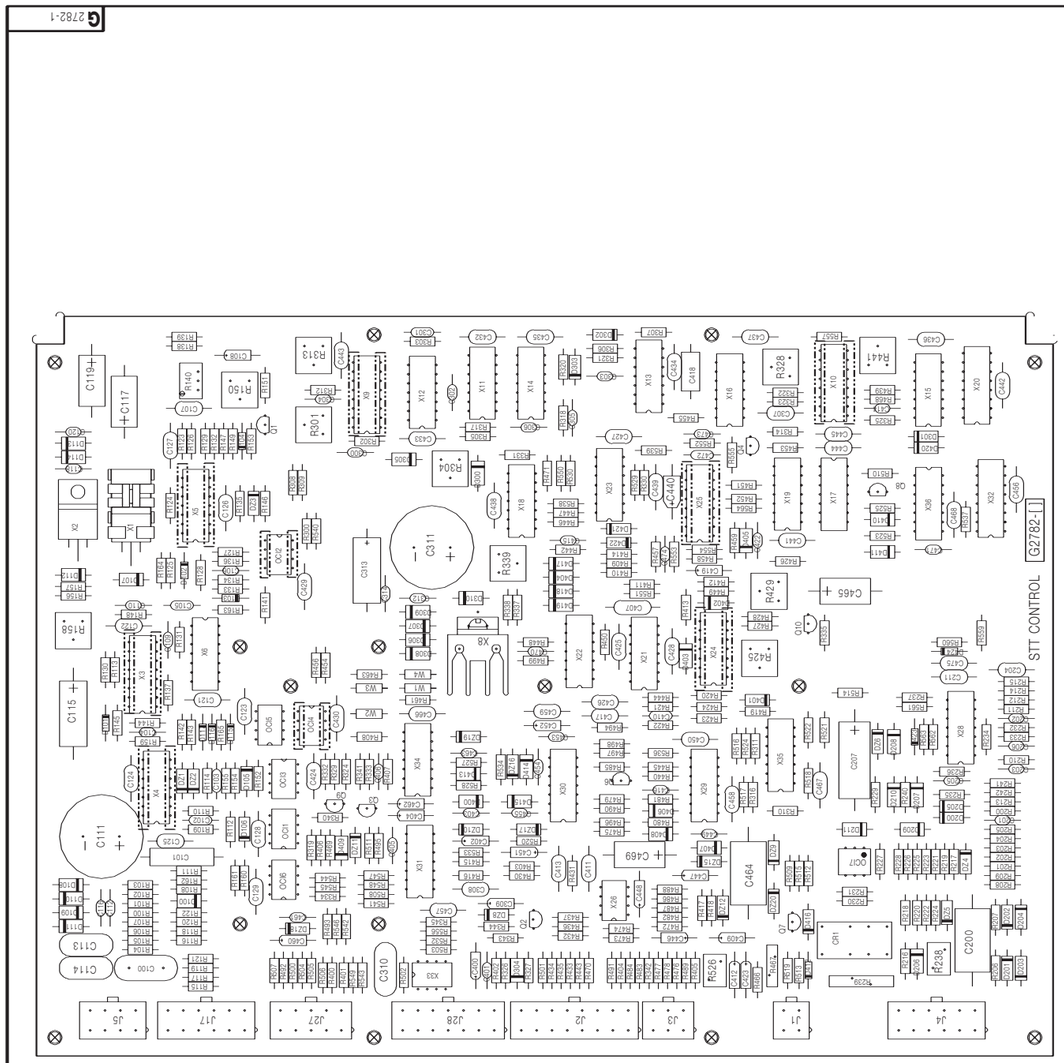


| ITEM | REQ'D | PART NO | IDENTIFICATION |
|---|---|---|---|
| C100 | 1 | T11577-58 | .0047/3000V |
| C101 | 1 | S13490-76 | .001/400 |
| C102, C103, C105, C301, C472 | 5 | S16668-3 | 100pF/100 |
| C104, C422 | 2 | S16668-6 | 4700pF/50 |
| C106, C205, C303, C305, C306 C470, C471 | 7 | S16668-8 | 330pF/100 |
| C107, C121, C122, C123, C124 C125, C126, C127, C128, C129 C204, C211, C307, C308, C411 C413, C424, C425, C426, C427 C428, C429, C430, C432, C433 C434, C435, C436, C437, C438 C439, C441, C442, C443, C444 C445, C450, C456, C457, C458 C459, C466, C467, C468 | 44 | S16668-11 | .1/50 |
| C108, C419 | 2 | S13490-19 | 1.8/20 |
| C109, C110, C416 | 3 | S16668-7 | 820pF/50 |
| C111, C311 | 2 | S13490-121 | 1000/35 |
| C112, C116, C118, C120, C201 C202, C203, C206, C300, C302 C304, C312, C314, C401, C403 C405, C406, C415, C449 C453, C454, C455, C461, C463 C473, C474 | 26 | S16668-5 | .022/50 |
| C113, C114, C310 | 3 | T11577-52 | .0047 or .005/1400 |
| C115 | 1 | S13490-66 | 47/35 |
| C117, C119 | 2 | S13490-93 | 27/35 |
| C200, C464 | 2 | S13490-94 | .33/200 |
| C207 | 1 | S13490-73 | 20/50 |
| C309, C400, C402, C404, C409 C412, C423, C446, C447, C448 C451, C452, C460, C462 | 14 | S13490-42 | 1.0/35 |
| C313 | 1 | S13490-97 | 100/20 |
| C407 | 1 | S16668-10 | 4700pF/50 |
| C410 | 1 | S16668-2 | 47pF/100 |
| C414 | 1 | S16668-6 | 4700pF/50V |
| C417, C475 | 2 | S16668-4 | 2700pF/50 |
| C418 | 1 | S13490-126 | .018/50V |
| C440 | 1 | S13490-25 | 4.7/35 |
| C465, C469 | 2 | S13490-104 | 39uF/20V |
| CR1 | 1 | S13929-8 | RELAY |
| D100, D108, D109, D110, D111 D306, D307, D308, D309 | 9 | T12199-2 | 1N4007 |
| D101, D102, D103, D104, D115 D116, D117, D412, D423, D424 | 10 | T12705-22 | 1N914 |
| D105, D106, D200, D201, D202 D203, D204, D205, D301, D302 D303, D401, D416, D420, D421 D422 | 16 | T12705-34 | 1N4936 |
| D107, D112, D113, D114, D206 D207, D208, D209, D210, D211 D300, D304, D305, D310, D400 D402, D403, D404, D405, D406 D407, D408, D409, D410, D411 D413, D414, D415, D417, D418 D419 | 31 | T12199-1 | 1N4004 |
| DZ1, DZ2, DZ10, DZ11, DZ15 DZ16, DZ17, DZ18, DZ19 | 9 | T12702-19 | 1N4742A |
| DZ3, DZ8, DZ12. | 3 | T12702-29 | 1N4744A |
| DZ4, DZ5 | 2 | T12702-37 | 1N4755A |
| DZ6 | 1 | T12702-53 | 1N4728A |
| DZ9, DZ20 | 2 | T12702-27 | 1N4740 |
| J1 | 1 | S18248-4 | HEADER |
| J2 | 1 | S18248-16 | HEADER |
| J3 | 1 | S18248-6 | HEADER |
| J4, J17 | 2 | S18248-12 | HEADER |
| J5 | 1 | S18248-8 | CONNECTOR |
| J27 | 1 | S18248-10 | HEADER |
| J28 | 1 | S18248-14 | HEADER |
| OC11, OC12, OC13, OC14, OC15 OC16 | 6 | S15000-27 | OPTOCOUPLER, LOGIC-OUT, DUAL |
| OC17 | 1 | S15000-10 | OPTO ISOLATOR |
| Q1, Q2, Q3, Q4, Q6, Q8, Q9, Q10 | 8 | T12704-68 | 2N4401 |
| Q7 | 1 | T12704-69 | 2N4403 |
| R100, R101, R102, R103, R104 R105, R106, R107, R115, R116 R117, R118, R119, R120, R121 R122, R447 | 17 | S19400-1372 | 13.7K 1/4W |
| R108, R162, R498 | 3 | S19400-2002 | 20K 1/4W |
| R109, R110, R112, R114, R133 R211, R215, R231, R409, R415 R419, R420, R519 | 13 | S19400-4752 | 47.5K 1/4W |
| R111, R113, R125, R128, R136 R159, R302, R305, R306, R318 R319, R322, R323, R334, R340 R468, R502, R537, R556 R557 | 20 | S19400-4751 | 4.75K |
| R123, R127, R513, R514 | 4 | S19400-6812 | 68.1K 1/4W |
| R124, R448, R449, R469, R476 R511, R520, R533, R534 | 9 | S19400-1004 | 1M 1/4W |
| R126 | 1 | S19400-5112 | 51.1K 1/4W |
| R129, R451, R538 | 3 | S19400-2672 | 26.7K 1/4W |
| R130, R131, R152, R153, R163 R164, R300, R308, R329, R332 R457, R461, R463 | 13 | S19400-3921 | 3.92K 1/4W |
| R132, R210, R499, R555 | 4 | S19400-2212 | 22.1K 1/4W |
| R134, R200, R345, R427, R428 R432, R436, R532 | 8 | S19400-1001 | 1K 1/4W |
| R135, R423, R490 | 3 | S19400-2673 | 267K 1/4W |

| ITEM | REQ'D | PART NO | IDENTIFICATION |
|---|---|---|---|
| R137, R142, R145, R147, R148 R213, R214, R233, R236, R237 R240, R310, R312, R314, R316 R320, R324, R325, R330, R331 R333, R403, R412, R414, R431 R435, R444, R445, R455, R475 R478, R509, R510, R527, R528 R529, R536, R539, R540, R551 R561, R563, R564 | 43 | S19400-1002 | 10K 1/4W |
| R138, R406, R452, R495, R508 R541, R542, R543, R544, R545 R546, R547, R548, R549 | 14 | S19400-2671 | 2.67K 1/4W |
| R139, R157, R337 | 3 | S19400-2430 | 243 1/4W |
| R140 | 1 | S16296-5 | 10K TRIMMER |
| R141, R146, R530 | 3 | S19400-8251 | 8.25K 1/4W |
| R143, R144, R232, R235, R416 R424, R446, R450, R459, R471 R480, R496, R552, R559 | 14 | S19400-1003 | 100K 1/4W |
| R149, R430 | 2 | S19400-3320 | 332 1/4W |
| R150 | 1 | T10812-36 | 5K 1/2W TRIMMER |
| R151 | 1 | S19400-6810 | 681 1/4W |
| R154, R155, R160, R161, R225 R226, R227, R228, R503 | 9 | S19400-1501 | 1.5K 1/4W |
| R156 | 1 | S19400-1821 | 1.82K 1/4W |
| R158, R339, R429 | 3 | T10812-62 | 500 1/2W TRIMMER |
| R165, R482, R486, R487, R488 | 5 | S19400-8250 | 825 1/4W |
| R201, R202, R203, R204, R205 R230, R434, R466, R483, R484 R492, R500, R501 | 13 | S19400-10R0 | 10 1/4W |
| R206, R207, R208, R209 | 4 | S19400-26R7 | 26.7 1/4W |
| R212, R335, R341, R407, R410 R437, R453, R550, R554 | 9 | S19400-1502 | 15K 1/4W |
| R216, R317, R343, R344, R417 R418, R473 | 7 | S19400-2211 | 2.21K 1/4W |
| R217, R218, R219, R220, R221 R222, R223, R224, R242, R400 R401, R505, R506 | 13 | S19400-1301 | 1.3K 1/4W |
| R229, R241 | 2 | S19400-2670 | 267 1/4W |
| R234, R522, R562 | 3 | S19400-3323 | 332K 1/4W |
| R238, R526 | 2 | S18380-1 | PTC THERMISTOR |
| R239 | 1 | S18380-3 | PTC THERMISTOR |
| R301 | 1 | T10812-39 | 50K 1/2W TRIMMER |
| R303, R472 | 2 | S19400-5621 | 5.62K 1/4W |
| R304, R313 | 2 | T10812-67 | 100K 1/2W TRIMMER |
| R307, R321, R442 | 3 | S19400-5622 | 56.2K 1/4W |
| R309, R485, R516, R517, R518 | 5 | S19400-3322 | 33.2K 1/4W |
| R311 | 1 | S19400-3922 | 39.2K 1/4W |
| R326, R327 | 2 | S19400-5110 | 511 1/4W |
| R328, R425, R441 | 3 | T10812-41 | 10K 1/2W TRIMMER |
| R338, R474 | 2 | S19400-2431 | 2.43K 1/4W |
| R342, R404, R405, R433, R440 R460, R470, R477, R481, R489, R491, R493, R507, R525 | 13 | S19400-1000 | 100 1/4W |
| R402, R504, R512 | 3 | S19400-75R0 | 75 1/4W |
| R408 | 1 | S19400-1782 | 17.8K 1/4W |
| R411, R494 | 2 | S19400-6811 | 6.81K 1/4W |
| R413 | 1 | S19400-2000 | 200 1/4W |
| R421 | 1 | S19400-4753 | 475K 1/4W |
| R422, R497, R523, R524 | 4 | S19400-1503 | 150K 1/4W |
| R426 | 1 | S19400-3321 | 3.32K 1/4W |
| R439 | 1 | S19400-1502 | 15K 1/4W |
| R443, R560 | 2 | S19400-8252 | 82.5K 1/4W |
| R454, R456 | 2 | S19400-3011 | 3.01K 1/4W |
| R458 | 1 | S19400-4750 | 475 1/4W |
| R467 | 1 | S18380-4 | PTC THERMISTOR |
| R479 | 1 | S19400-5620 | 562 1/4W |
| R515 | 1 | S19400-15R0 | 15 1/4W |
| R521 | 1 | S19400-2213 | 221K 1/4W |
| R553 | 1 | S19400-2432 | 24.3K 1/4W |
| W1, W2, W3, W4, | 4 | S18317-1 | 0.01 OHMS INSULATED JUMPER |
| X1 | 1 | S15128-15 | |
| X2 | 1 | S15128-12 | VOLTAGE REGULATOR |
| X3 | 1 | M14513-6 | IC, CMOS, SAMPLE/HOLD, QUAD |
| X4 | 1 | S15128-22 | IC, OP-AMP, QUAD, LO-NOISE |
| X5, X23, X28 | 3 | S15128-11 | 14 PIN QUAD COMPARATOR |
| X6, X11, X12, X13, X14, X15, X16 X17, X18, X36 | 10 | S15018-15 | 14 PIN I.C. |
| X8 | 1 | S18395-23 | REG. H.S. ASBLY |
| X9, X10 | 2 | S15018-9 | CMOS MC14538B |
| X19 | 1 | S15018-10 | 14 PIN I.C. |
| X20, X32 | 2 | S15018-5 | 16 PIN I.C. |
| X21, X22, X30, X31 | 4 | S15018-6 | DIGITAL INTEGRATED CIRCUIT |
| X24, X35 | 2 | S15128-16 | LINEAR INTEGRATED CIRCUIT |
| X25 | 1 | M15458-2 | PWM CONTROLLER I.C. |
| X26, X33 | 2 | S15128-10 | VOLTAGE REF. |
| X29, X34 | 2 | S15128-4 | LM224 OP-AMP |

CAPACITORS = MFD/VOLTS
RESISTORS = OHMS

THIS SHEET CONTAINS PROPRIETARY INFORMATION OWNED BY THE LINCOLN ELECTRIC CO. AND IS NOT TO BE REPRODUCED, DISCLOSED OR USED WITHOUT THE EXPRESS PERMISSION OF THE LINCOLN ELECTRIC CO.

UNLESS OTHERWISE SPECIFIED TOLERANCES ON HOLE SIZES PER E2056 ON 2 PLACE DECIMALS IS ±02 ON 3 PLACE DECIMALS IS ±002 ON ALL ANGLES IS ±5 OF A DEGREE MATERIAL TOLERANCE 1" THICK TO AGREE WITH PUBLISHED STANDARDS.

Chge. Ltr. No.

| | | | | |
|---|---|---|---|---|
| L-19-95 | | | | |
| J-29-95C | | | | |
| A-24-96E | | | | |

THE LINCOLN ELECTRIC CO. CLEVELAND, OHIO U.S.A.
EQUIP. TYPE STT INVERTER WELDER
SUBJECT CONTROL P.C. BOARD ASSEMBLY
SCALE NULL
DR F.V. DATE 8-8-94 CHK DV REF. 18441-3 SUP'S'D'G
SHT. NO. G 2782-1

**NOTE:** Lincoln Electric assumes no responsibility for liablilities resulting from board level troubleshooting. PC Board repairs will invalidate your factory warranty. **Individual Printed Circuit Board Components are not available from Lincoln Electric.** This information is provided for reference only. Lincoln Electric discourages board level troubleshooting and repair since it may compromise the quality of the design and may result in danger to the Machine Operator or Technician. Improper PC board repairs could result in damage to the machine.



Return to Section TOC
Return to Master TOC

## Schematic - Control PC Board - Codes 11115 - 11116 - (G4649 Sheet 1 of 2)

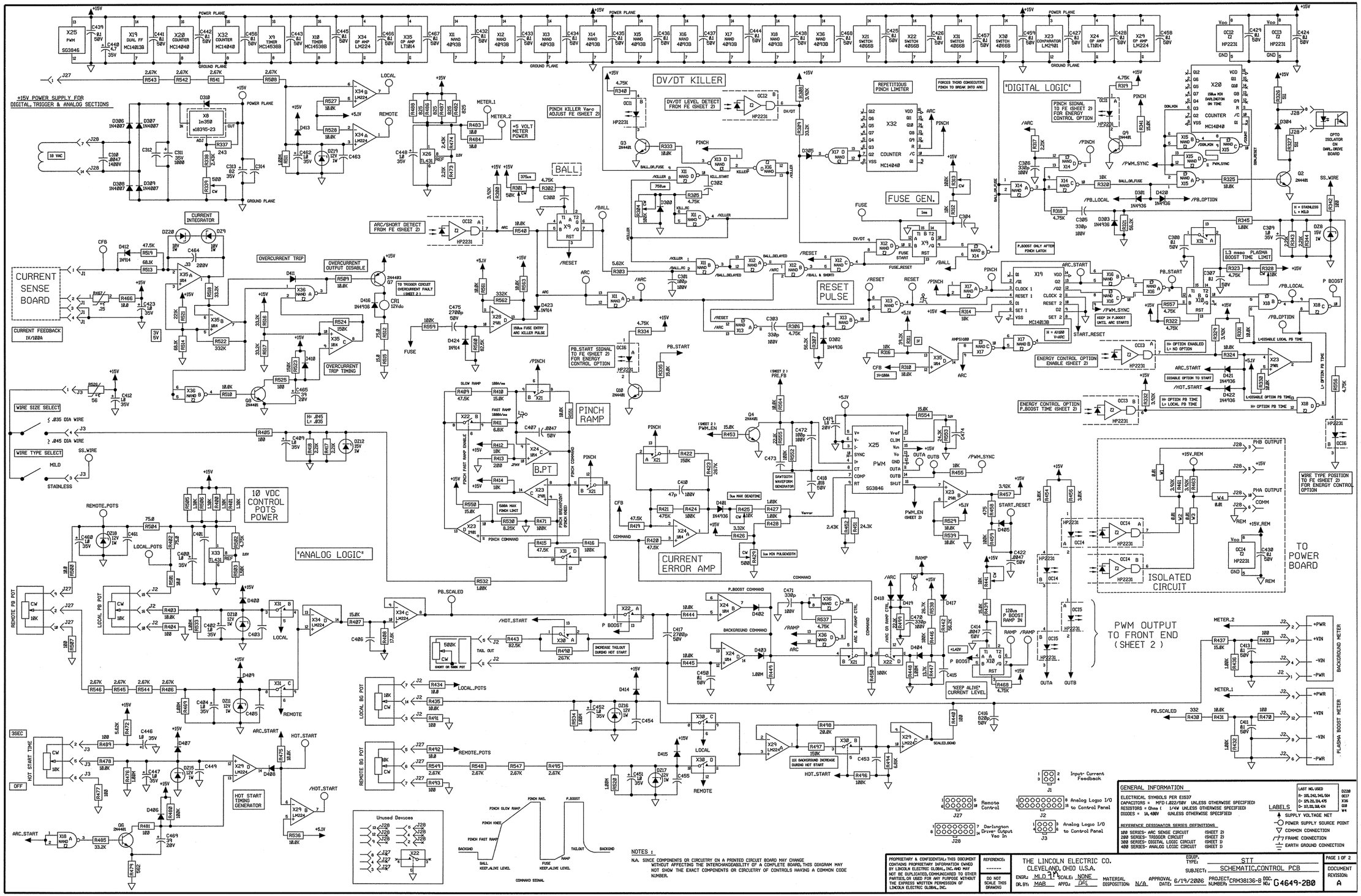


Return to Section TOC
Return to Master TOC
Return to Section TOC
Return to Master TOC
Return to Section TOC
Return to Master TOC

Return to Section TOC
Return to Master TOC



## Schematic - Control PC Board - Codes 11115 - 11116 - (G4649 Sheet 2 of 2)

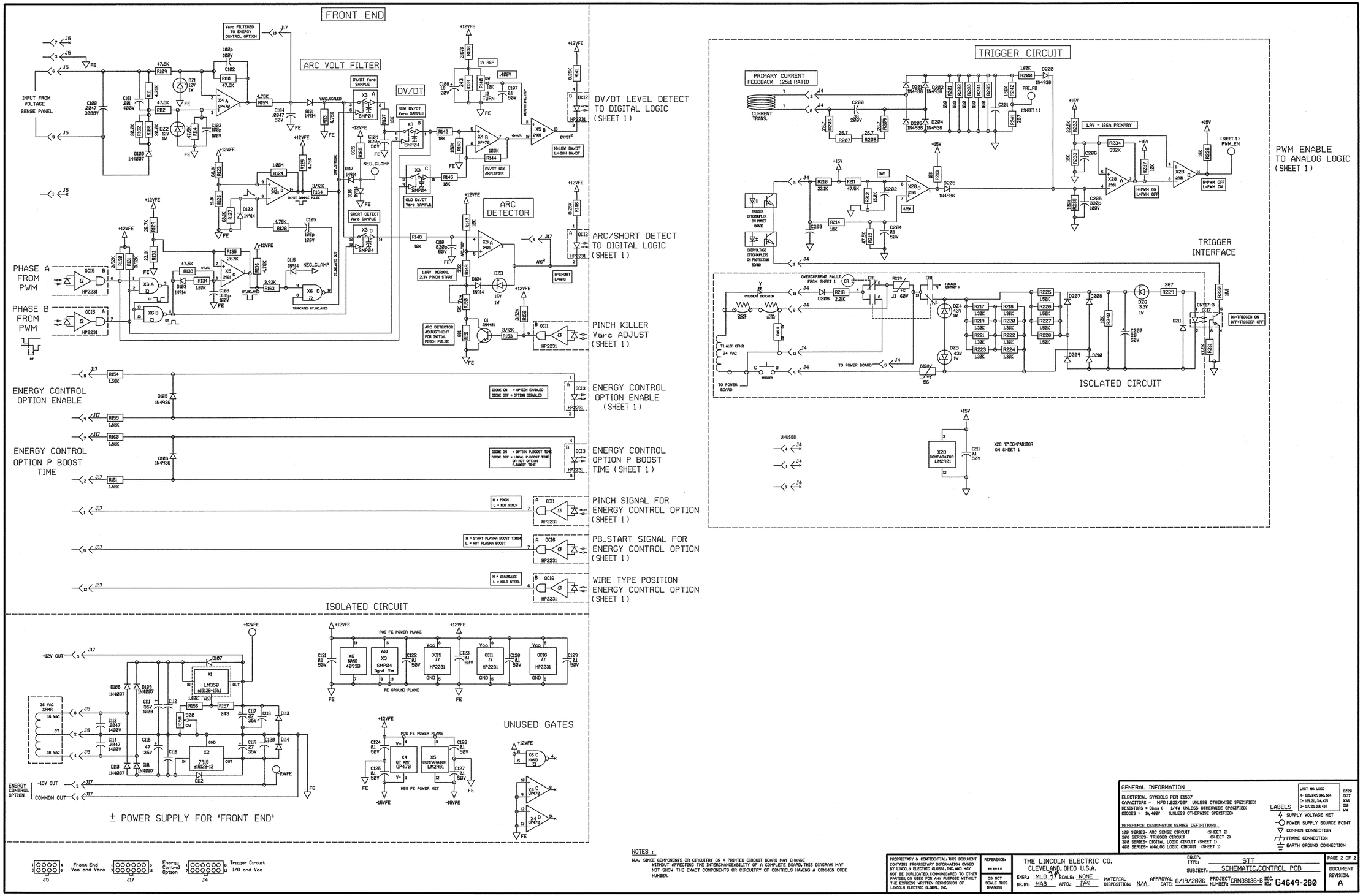


**NOTE:** Lincoln Electric assumes no responsibility for liablilities resulting from board level troubleshooting. PC Board repairs will invalidate your factory warranty. **Individual Printed Circuit Board Components are not available from Lincoln Electric.** This information is provided for reference only. Lincoln Electric discourages board level troubleshooting and repair since it may compromise the quality of the design and may result in danger to the Machine Operator or Technician. Improper PC board repairs could result in damage to the machine.

## PC Board Assembly - Control - Codes 11115 - 11116 - (G4648)

G4648-2 | ENGINEERING CONTROLLED | CHANGE DETAIL: NEW
MANUFACTURER: No

P.C. BOARD BLANK INFORMATION
BUY BLANK COMPLETE AS G4648-B
(4 LAYER BOARD PER E3281)
(MAKES 2 BOARDS PER PANEL; SEE ELECTRONIC FILE FOR ADDITIONAL INFORMATION)

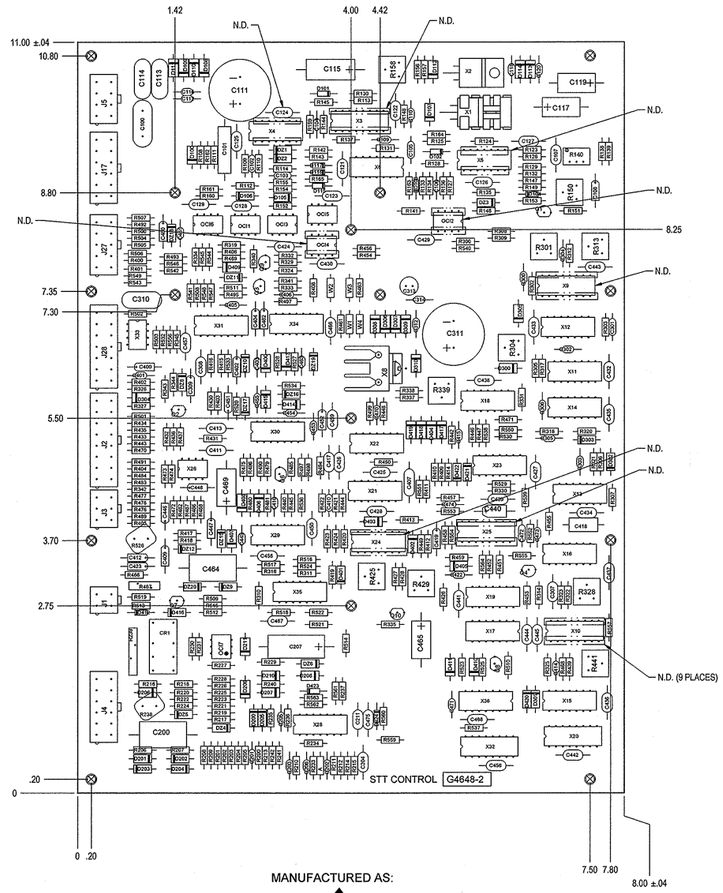


MANUFACTURED AS:

G4648-2B0

IDENTIFICATION CODE

**ALL COMPONENTS AND MATERIALS USED IN THIS ASSEMBLY ARE TO BE RoHS COMPLIANT PER E4253.**

MAKE PER E1911
ENCAPSULATE WITH E1844 (2 COATS)
TEST PER E4117-C

| ITEM | REQ'D | PART NO | IDENTIFICATION |
|---|---|---|---|
| C100 | 1 | T11577-58K | .0047/3000V |
| C101 | 1 | S13490-76 | .001/400 |
| C102,C103,C105,C301,C472 | 5 | S16668-3 | 100pF/100 |
| C104,C414,C422 | 3 | S16668-6 | 4700pF/50 |
| C106,C205,C303,C305,C306 C470,C471 | 7 | S16668-8 | 330pF/100 |
| C107,C121,C122,C123,C124 C125,C126,C127,C128,C129 C204,C211,C307,C308,C411 C413,C424,C425,C426,C427 C428,C429,C430,C432,C433 C434,C435,C436,C437,C438 C439,C441,C442,C443,C444 C445,C450,C456,C457,C458 C459,C466,C467,C468 | 44 | S16668-11 | .1/50 |
| C108,C419 | 2 | S13490-19 | 1.8/20 |
| C109,C110,C416 | 3 | S16668-7 | 820pF/50 |
| C111,C311 | 2 | S13490-121 | 1000/35 |
| C112,C116,C118,C120,C201 C202,C203,C206,C300,C302 C304,C312,C314,C401,C403 C405,C406,C415,C449,C453 C454,C455,C461,C463,C473 C474 | 26 | S16668-5 | .022/50 |
| C113,C114,C310 | 3 | T11577-52K | .0047 or .005/1400 |
| C115 | 1 | S13490-66 | 47/35 |
| C117,C119 | 2 | S13490-93 | 27/35 |
| C200,C464 | 2 | S13490-94 | 33/200 |
| C207 | 1 | S13490-73 | 20/50 |
| C309,C400,C402,C404,C409 C412,C423,C446,C447,C448 C451,C452,C460,C462 | 14 | S13490-42 | 1.0/35 |
| C313 | 1 | S13490-197 | 82/35 |
| C407 | 1 | S16668-10 | 4700pF/50 |
| C410 | 1 | S16668-2 | 47pF/100 |
| C417,C475 | 2 | S16668-4 | 2700pF/50 |
| C418 | 1 | S13490-126 | .018/50V |
| C440 | 1 | S13490-25 | 4.7/35 |
| C465,C469 | 2 | S13490-104 | 39uF/20V |
| CR1 | 1 | S13929-8 | RELAY,DPDT,12VDC |
| D100,D108,D109,D110,D111 D306,D307,D308,D309 | 9 | T12199-2 | 1N4007 |
| D101,D102,D103,D104,D115 D116,D117,D412,D423,D424 | 10 | T12705-22 | 1N914 |
| D105,D106,D200,D201,D202 D203,D204,D205,D301,D302 D303,D401,D416,D420,D421 D422 | 16 | T12705-34 | 1N4936 |
| D107,D112,D113,D114,D206 D207,D208,D209,D210,D211 D300,D304,D305,D310,D400 D402,D403,D404,D405,D406 D407,D408,D409,D410,D411 D413,D414,D415,D417,D418 D419 | 31 | T12199-1 | 1N4004 |
| DZ1,DZ2,DZ10,DZ11,DZ15 DZ16,DZ17,DZ18,DZ19 | 9 | T12702-19 | 1N4742A |
| DZ3,DZ8,DZ12 | 3 | T12702-29 | 1N4744A |
| DZ4,DZ5 | 2 | T12702-37 | 1N4755A |
| DZ6 | 1 | T12702-53 | 1N4728A |
| DZ9,DZ20 | 2 | T12702-27 | 1N4740 |
| N.C. J1 | 1 | S18248-4 | HEADER |
| N.C. J2 | 1 | S18248-16 | HEADER |
| N.C. J3 | 1 | S18248-6 | HEADER |
| N.C. J4,J17 | 2 | S18248-12 | HEADER |
| N.C. J5 | 1 | S18248-8 | HEADER |
| N.C. J27 | 1 | S18248-10 | HEADER |
| N.C. J28 | 1 | S18248-14 | HEADER |
| OCI1,OCI2,OCI3,OCI4,OCI5 OCI6 | 6 | S15000-27 | OPTOCOUPLER,LOGIC-OUT,DUAL |
| OCI7 | 1 | S15000-10 | OPTO ISOLATOR |
| Q1,Q2,Q3,Q4,Q5,Q8,Q9,Q10 | 8 | T12704-68 | 2N4401 |
| Q7 | 1 | T12704-69 | 2N4403 |
| R108,R162,R498 | 3 | S19400-2002 | 20K 1/4W |
| R109,R110,R112,R114,R133 R211,R215,R231,R409,R415 R419,R420,R519 | 13 | S19400-4752 | 47.5K 1/4W |
| R111,R113,R125,R128,R136 R159,R302,R305,R306,R318 R319,R322,R323,R334,R340 R468,R502,R537,R556,R557 | 20 | S19400-4751 | 4.75K |
| R123,R127,R513,R514 | 4 | S19400-6812 | 68.1K 1/4W |
| R124,R448,R449,R469,R476 R511,R520,R533,R534 | 9 | S19400-1004 | 1M 1/4W |
| R126 | 1 | S19400-5112 | 51.1K 1/4W |
| R129,R538 | 2 | S19400-2672 | 26.7K 1/4W |
| R130,R131,R152,R153,R163 R164,R300,R308,R329,R332 R457,R461,R463 | 13 | S19400-3921 | 3.92K 1/4W |
| R132,R210,R499,R555 | 4 | S19400-2212 | 22.1K 1/4W |

| ITEM | REQ'D | PART NO | IDENTIFICATION |
|---|---|---|---|
| R134,R200,R345,R427,R428 R432,R436,R532 | 8 | S19400-1001 | 1K 1/4W |
| R135,R423,R490 | 3 | S19400-2673 | 267K 1/4W |
| R137,R142,R145,R147,R148 R213,R214,R233,R236,R237 R240,R310,R312,R314,R316 R320,R324,R325,R330,R331 R333,R403,R412,R414,R431 R435,R444,R445,R455,R475 R478,R509,R510,R527,R528 R529,R536,R539,R540,R551 R561,R563,R564 | 43 | S19400-1002 | 10K 1/4W |
| R138,R406,R495,R508,R541 R542,R543,R544,R545,R546 R547,R548,R549 | 13 | S19400-2671 | 2.67K 1/4W |
| R139,R157,R337 | 3 | S19400-2430 | 243 1/4W |
| R140 | 1 | S16296-5 | 10K TRIMMER |
| R141,R146,R530 | 3 | S19400-8251 | 8.25K 1/4W |
| R143,R144,R235,R416,R424 R446,R450,R459,R471,R480 R498,R552,R559 | 13 | S19400-1003 | 100K 1/4W |
| R149,R430 | 2 | S19400-3320 | 332 1/4W |
| R150 | 1 | T10812-36 | 5K 1/2W TRIMMER |
| R151 | 1 | S19400-6810 | 681 1/4W |
| R154,R155,R160,R161,R225 R226,R227,R228,R242,R503 | 10 | S19400-1501 | 1.5K 1/4W |
| R156 | 1 | S19400-1821 | 1.82K 1/4W |
| R158,R339,R429 | 3 | T10812-62 | 500 1/2W TRIMMER |
| R165,R482,R486,R487,R488 | 5 | S19400-8250 | 825 1/4W |
| R201,R202,R203,R204,R205 R230,R434,R466,R483,R484 R492,R500,R501 | 13 | S19400-10R0 | 10 1/4W |
| R206,R207,R208,R209 | 4 | S19400-26R7 | 26.7 1/4W |
| R212,R335,R341,R407,R410 R437,R439,R453,R550,R554 | 10 | S19400-1502 | 15K 1/4W |
| R216,R317,R343,R344,R417 R418,R473 | 7 | S19400-2211 | 2.21K 1/4W |
| R217,R218,R219,R220,R221 R222,R223,R224,R400,R401 R505,R506 | 12 | S19400-1301 | 1.3K 1/4W |
| R229,R241 | 2 | S19400-2670 | 267 1/4W |
| R232,R443,R560 | 3 | S19400-8252 | 82.5K 1/4W |
| R234,R522,R562 | 3 | S19400-3323 | 332K 1/4W |
| R238,R526 | 2 | S18380-1 | THERMISTOR,PTC,56 OHMS,90MA |
| R239 | 1 | S18380-3 | THERMISTOR,PTC,0.08-0.19 OHMS,1.85A |
| R301 | 1 | T10812-39 | 50K 1/2W TRIMMER |
| R303,R472 | 2 | S19400-5621 | 5.62K 1/4W |
| R304,R313 | 2 | T10812-67 | 100K 1/2W TRIMMER |
| R307,R321,R442 | 3 | S19400-5622 | 56.2K 1/4W |
| R309,R485,R516,R517,R518 | 5 | S19400-3322 | 33.2K 1/4W |
| R311 | 1 | S19400-3922 | 39.2K 1/4W |
| R326,R327 | 2 | S19400-5110 | 511 1/4W |
| R328,R425,R441 | 3 | T10812-41 | 10K 1/2W TRIMMER |
| R338,R452,R474 | 3 | S19400-2431 | 2.43K 1/4W |
| R342,R404,R405,R433,R440 R470,R477,R481,R489,R491 R493,R507,R525 | 13 | S19400-1000 | 100 1/4W |
| R402,R504,R512 | 3 | S19400-75R0 | 75 1/4W |
| R408 | 1 | S19400-1782 | 17.8K 1/4W |
| R411,R494 | 2 | S19400-6811 | 6.81K 1/4W |
| R413 | 1 | S19400-2000 | 200 1/4W |
| R421 | 1 | S19400-4753 | 475K 1/4W |
| R422,R497,R523,R524 | 4 | S19400-1503 | 150K 1/4W |
| R426 | 1 | S19400-3321 | 3.32K 1/4W |
| R447 | 1 | S19400-1372 | 13.7K 1/4W |
| R451,R553 | 2 | S19400-2432 | 24.3K 1/4W |
| R454,R456 | 2 | S19400-3011 | 3.01K 1/4W |
| R458 | 1 | S19400-4750 | 475 1/4W |
| R467 | 1 | S18380-4 | THERMISTOR,PTC,0.02-0.47 OHMS,0.90A |
| R479 | 1 | S19400-5620 | 562 1/4W |
| R515 | 1 | S19400-15R0 | 15 1/4W |
| R521 | 1 | S19400-2213 | 221K 1/4W |
| W1,W2,W3,W4 | 4 | S18317-1 | 0.01 OHM INSULATED JUMPER |
| N.B. X1 | 1 | S15128-15 | IC,LM350T,LINEAR INTEGRATED CIRCUIT |
| X2 | 1 | S15128-12 | IC,7915,VOLTAGE REGULATOR |
| X3 | 1 | M14513-6 | IC,CMOS,SAMPLE/HOLD,QUAD |
| X4 | 1 | S15128-22 | IC,OP-AMP,QUAD,LO-NOISE |
| X5,X23,X28 | 3 | S15128-11 | 14 PIN QUAD COMPARATOR |
| N.A. X6,X11,X12,X13,X14,X15,X16 X17,X18,X36 | 10 | S15018-15 | 14 PIN I.C. (SS) |
| X8 | 1 | S18395-23 | REG. H.S. ASBLY |
| N.A. X9,X10 | 2 | S15018-9 | CMOS MC14538B (SS) |
| N.A. X19 | 1 | S15018-10 | 14 PIN I.C. (SS) |
| N.A. X20,X32 | 2 | S15018-5 | 16 PIN I.C. (SS) |
| N.A. X21,X22,X30,X31 | 4 | S15018-6 | DIGITAL INTEGRATED CIRCUIT (SS) |
| X24,X35 | 2 | S15128-16 | IC,LT1014,LINEAR INTEGRATED CIRCUIT |
| N.A. X25 | 1 | M15458-2 | IC,3846,PWM CONTROLLER (SS) |
| X26,X33 | 2 | S15128-10 | IC,431,VOLTAGE REF. |
| X29,X34 | 2 | S15128-4 | IC,LM224,OP-AMP |

CAPACITORS = MFD/VOLTS
INDUCTANCE = HENRIES
RESISTANCE = OHMS

N.A. CAUTION: THIS DEVICE IS SUBJECT TO DAMAGE BY STATIC ELECTRICITY. SEE E2454 BEFORE HANDLING.

N.B. MOUNT TO ITEM 4 HEATSINK.

N.C. DO NOT COAT WITH ENCAPSULATION MATERIAL.

N.D. AFTER COMPLETE ASSEMBLY AND TEST, SEAL IC PINS, ON OPPOSITE COMPONENT SIDE OF BOARD WITH ITEM 2.

N.E. SEAL TRIMMERS WITH ITEM 3 AFTER TEST.

| ITEM | REQ'D | PART NO. | DESCRIPTION |
|---|---|---|---|
| 1 | 1 | SEE BLANK INFO. | P.C. BOARD BLANK |
| 2 | 1.2 oz. | E2861 | SEALANT |
| 3 | 2.0 oz. | E1389-G | SEALANT |
| 4 | 1 | S20590-1 | HEATSINK |

SCHEMATIC REFERENCE: G4649-2B0

EN-170

**PROPRIETARY & CONFIDENTIAL:** THIS DOCUMENT CONTAINS PROPRIETARY INFORMATION OWNED BY LINCOLN GLOBAL, INC. AND MAY NOT BE DUPLICATED, COMMUNICATED TO OTHER PARTIES OR USED FOR ANY PURPOSE WITHOUT THE EXPRESS WRITTEN PERMISSION OF LINCOLN GLOBAL, INC.

UNLESS OTHERWISE SPECIFIED TOLERANCE MANUFACTURING TOLERANCE PER E0056 ON 2 PLACE DECIMALS IS ± .02 ON 3 PLACE DECIMALS IS ± .002 ON ALL ANGLES IS ± .5 OF A DEGREE MATERIAL TOLERANCE (T) TO AGREE WITH PUBLISHED STANDARDS
DO NOT SCALE THIS DRAWING

DESIGN INFORMATION
DRAWN BY: FD
ENGINEER:
APPROVED:

REFERENCE: G4648-1
SCALE: 1:1

EQUIPMENT TYPE: INVERTER WELDERS
SUBJECT: CONTROL P.C. BOARD ASSEMBLY
MATERIAL DISPOSITION: NA
APPROVAL DATE: 06/20/2006
PROJECT NUMBER: CRM38138-B

PAGE 1 OF 1
DOCUMENT NUMBER: G4648-2
DOCUMENT REVISION: A

SOLID EDGE



Return to Section TOC
Return to Master TOC
Return to Section TOC
Return to Master TOC
Return to Section TOC
Return to Master TOC

## Schematic - Power PC Board - All Codes - (M16018)

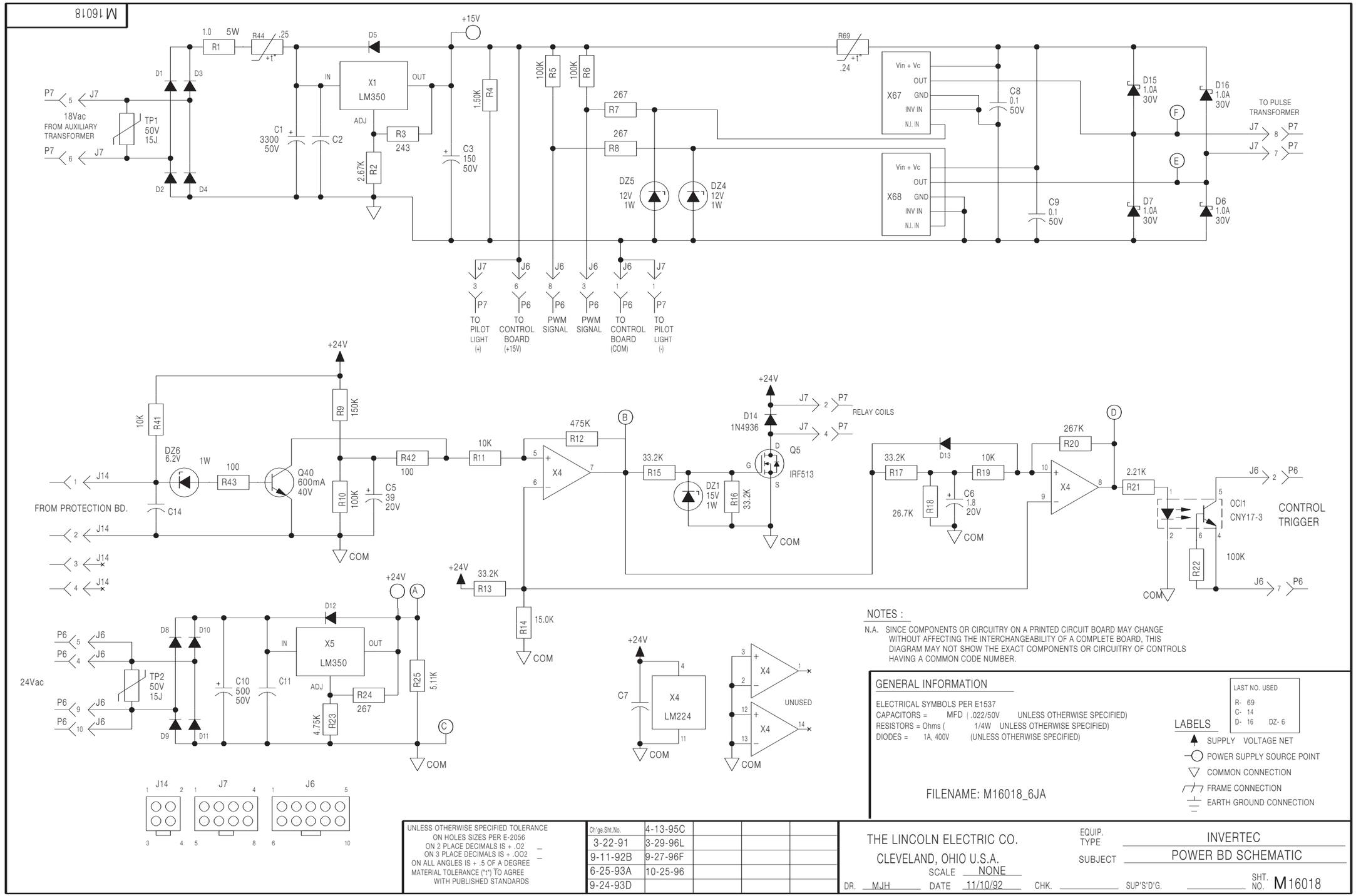


NOTES :

N.A. SINCE COMPONENTS OR CIRCUITRY ON A PRINTED CIRCUIT BOARD MAY CHANGE WITHOUT AFFECTING THE INTERCHANGEABILITY OF A COMPLETE BOARD, THIS DIAGRAM MAY NOT SHOW THE EXACT COMPONENTS OR CIRCUITRY OF CONTROLS HAVING A COMMON CODE NUMBER.

GENERAL INFORMATION

ELECTRICAL SYMBOLS PER E1537
CAPACITORS = MFD | .022/50V UNLESS OTHERWISE SPECIFIED)
RESISTORS = Ohms ( 1/4W UNLESS OTHERWISE SPECIFIED)
DIODES = 1A, 400V (UNLESS OTHERWISE SPECIFIED)

LAST NO. USED
R- 69
C- 14
D- 16 DZ- 6

LABELS
SUPPLY VOLTAGE NET
POWER SUPPLY SOURCE POINT
COMMON CONNECTION
FRAME CONNECTION
EARTH GROUND CONNECTION

FILENAME: M16018_6JA

UNLESS OTHERWISE SPECIFIED TOLERANCE
ON HOLES SIZES PER E-2056
ON 2 PLACE DECIMALS IS + .02
ON 3 PLACE DECIMALS IS + .002
ON ALL ANGLES IS + .5 OF A DEGREE
MATERIAL TOLERANCE (*t*) TO AGREE WITH PUBLISHED STANDARDS

| Ch'ge.Sht.No. | | | | |
|---|---|---|---|---|
| 3-22-91 | 4-13-95C | | | |
| 9-11-92B | 3-29-96L | | | |
| 6-25-93A | 9-27-96F | | | |
| 9-24-93D | 10-25-96 | | | |

THE LINCOLN ELECTRIC CO.
CLEVELAND, OHIO U.S.A.
SCALE NONE
DR. MJH DATE 11/10/92 CHK. SUP'S'D'G.

EQUIP. TYPE INVERTEC
SUBJECT POWER BD SCHEMATIC
SHT. NO. M16018

LINCOLN ELECTRIC

NOTE: Lincoln Electric assumes no responsibility for liablilities resulting from board level troubleshooting. PC Board repairs will invalidate your factory warranty. **Individual Printed Circuit Board Components are not available from Lincoln Electric.** This information is provided for reference only. Lincoln Electric discourages board level troubleshooting and repair since it may compromise the quality of the design and may result in danger to the Machine Operator or Technician. Improper PC board repairs could result in damage to the machine.



Return to Section TOC
Return to Master TOC
Return to Section TOC
Return to Master TOC
Return to Section TOC
Return to Master TOC

## PC Board Assembly - Power - All Codes - (L8033)

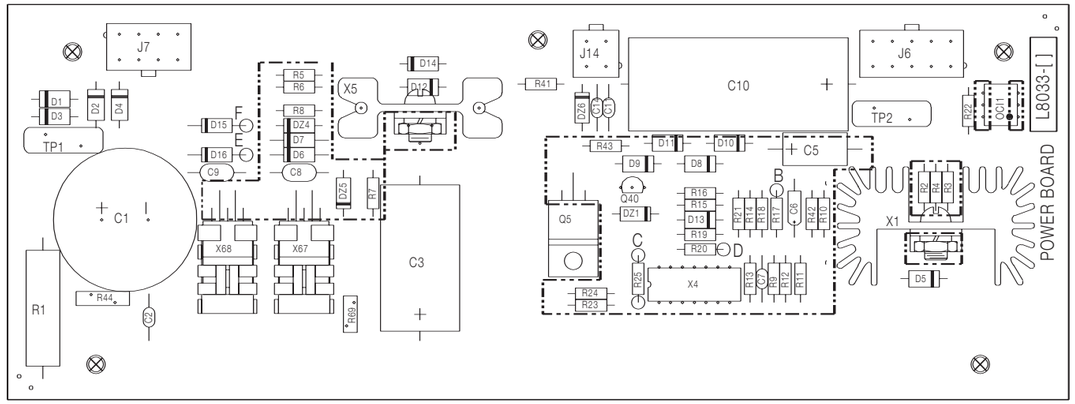


| ITEM | REQ'D | PART NO. | IDENTIFICATION |
|---|---|---|---|
| C1 | 1 | S13490-92 | 3300/50 |
| C2, C7, C11, C14 | 4 | S16668-5 | .022/50 |
| C3 | 1 | T11577-2 | 150/50 |
| C5 | 1 | S13490-64 | 39uF/20VDC |
| C6 | 1 | S13490-19 | 1.8/20 |
| C8, C9 | 2 | S16668-11 | .1/50 |
| C10 | 1 | T11577-49 | 500/50 |
| D1, D2, D3, D4, D5, D8, D9, D10 D11, D12, D13 | 11 | T12199-1 | 1N4004 |
| D6, D7, D15, D16 | 4 | T12705-23 | 1N5818 |
| D14 | 1 | T12705-34 | 1N4936 |
| DZ1 | 1 | T12702-29 | 1N4744A |
| DZ4, DZ5 | 2 | T12702-19 | 1N4742A |
| DZ6 | 1 | T12702-40 | 1N4735 |
| J6 | 1 | S18248-10 | HEADER |
| J7 | 1 | S18248-8 | CONNECTOR |
| J14 | 1 | S18248-4 | HEADER |
| OCI1 | 1 | S15000-10 | OPTO ISOLATOR |
| Q5 | 1 | T12704-65 | 3.5A. 60V. MOSFET (SS) |
| Q40 | 1 | T12704-68 | 2N4401 |
| R1 | 1 | T13165-16 | 1.0 OHM, 5W RESISTOR |
| R2 | 1 | S19400-2671 | 2.67K 1/4W |
| R3 | 1 | S19400-2430 | 243 1/4W |
| R4 | 1 | S19400-1501 | 1.5K 1/4W |
| R5, R6, R10, R22 | 4 | S19400-1003 | 100K 1/4W |
| R7, R8, R24 | 3 | S19400-2670 | 267 1/4W |
| R9 | 1 | S19400-1503 | 150K 1/4W |
| R11, R19, R41 | 3 | S19400-1002 | 10K 1/4W |
| R12 | 1 | S19400-4753 | 475K 1/4W |
| R13, R15, R16, R17 | 4 | S19400-3322 | 33.2K 1/4W |
| R14 | 1 | S19400-1502 | 15K 1/4W |
| R18 | 1 | S19400-2672 | 26.7K 1/4W |
| R20 | 1 | S19400-2673 | 267K 1/4W |
| R21 | 1 | S19400-2211 | 2.21K 1/4W |
| R23 | 1 | S19400-4751 | 4.75K |
| R25 | 1 | S19400-5111 | 5.11K 1/4W |
| R42, R43 | 2 | S19400-1000 | 100 1/4W |
| R44 | 1 | S18380-4 | PTC THERMISTOR |
| R69 | 1 | S18380-5 | PTC THERMISTOR |
| TP1, TP2 | 2 | T13640-15 | 15J |
| X1 | 1 | S18647 | REGULATOR ASBLY |
| X4 | 1 | S15128-4 | LM224 OP-AMP |
| X5 | 1 | S18647-1 | VOLT. REG. & HEAT SINK ASBLY. |
| X67, X68 | 2 | S15018-19 | IC,TO220T,FET DRIVER |
| | | | |
| | | | |
| | | | |
| | | | |

CAPACITORS = MFD/VOLTS
INDUCTANCE = HENRYS

Return to Section TOC
Return to Master TOC
Return to Section TOC
Return to Master TOC
Return to Section TOC
Return to Master TOC

LINCOLN ELECTRIC

**NOTE:** Lincoln Electric assumes no responsibility for liablilities resulting from board level troubleshooting. PC Board repairs will invalidate your factory warranty. **Individual Printed Circuit Board Components are not available from Lincoln Electric.** This information is provided for reference only. Lincoln Electric discourages board level troubleshooting and repair since it may compromise the quality of the design and may result in danger to the Machine Operator or Technician. Improper PC board repairs could result in damage to the machine.

## Schematic - Darlington Drive Board - Codes 10151 - 10383 - (M17581)

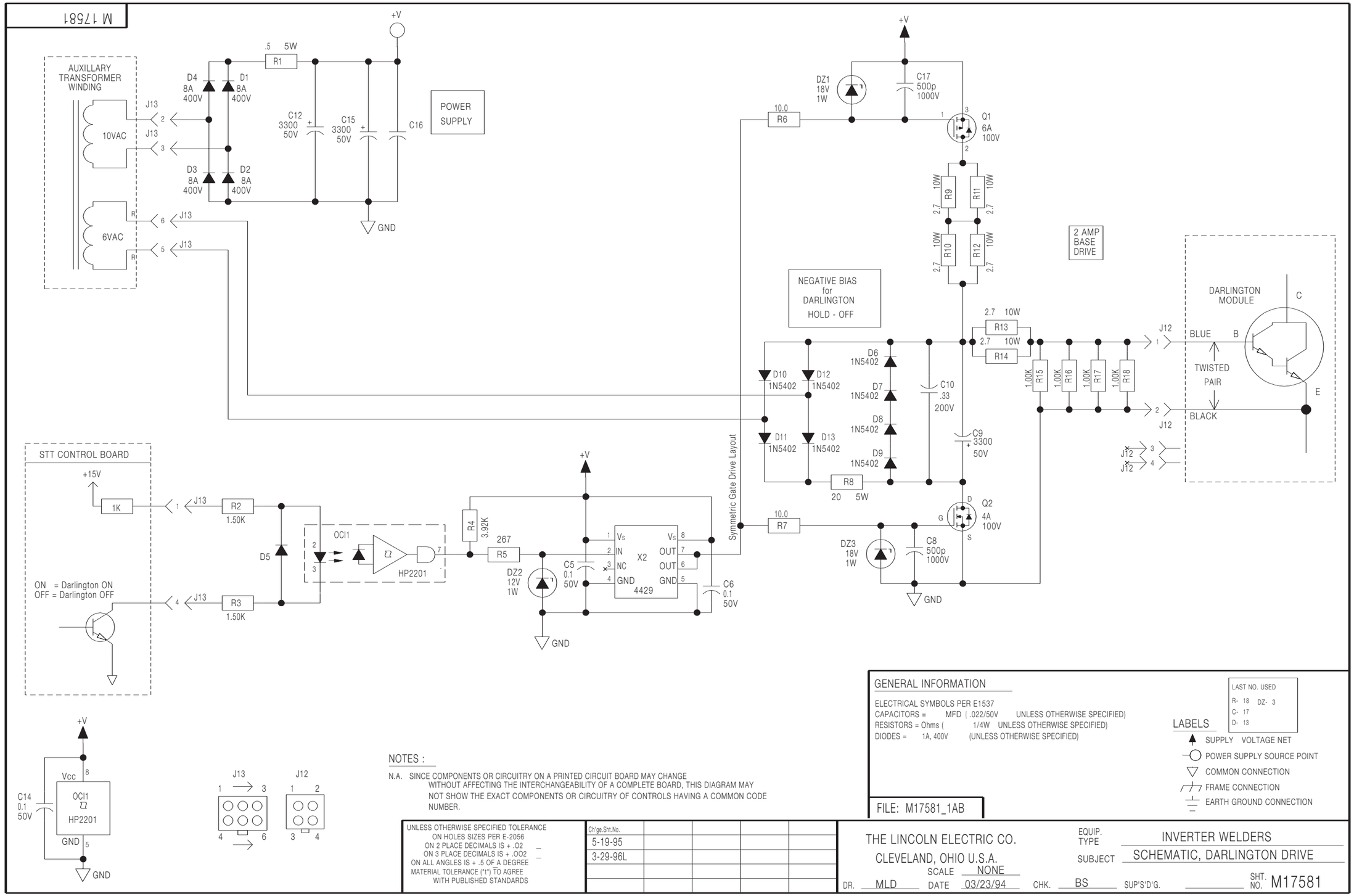


NOTES :

N.A. SINCE COMPONENTS OR CIRCUITRY ON A PRINTED CIRCUIT BOARD MAY CHANGE WITHOUT AFFECTING THE INTERCHANGEABILITY OF A COMPLETE BOARD, THIS DIAGRAM MAY NOT SHOW THE EXACT COMPONENTS OR CIRCUITRY OF CONTROLS HAVING A COMMON CODE NUMBER.

GENERAL INFORMATION

ELECTRICAL SYMBOLS PER E1537
CAPACITORS = MFD ( .022/50V UNLESS OTHERWISE SPECIFIED)
RESISTORS = Ohms ( 1/4W UNLESS OTHERWISE SPECIFIED)
DIODES = 1A, 400V (UNLESS OTHERWISE SPECIFIED)

LAST NO. USED
R- 18 DZ- 3
C- 17
D- 13

LABELS
- SUPPLY VOLTAGE NET
- POWER SUPPLY SOURCE POINT
- COMMON CONNECTION
- FRAME CONNECTION
- EARTH GROUND CONNECTION

FILE: M17581_1AB

UNLESS OTHERWISE SPECIFIED TOLERANCE
ON HOLES SIZES PER E-2056
ON 2 PLACE DECIMALS IS + .02
ON 3 PLACE DECIMALS IS + .002
ON ALL ANGLES IS + .5 OF A DEGREE
MATERIAL TOLERANCE (*t*) TO AGREE WITH PUBLISHED STANDARDS

| Ch'ge.Sht.No. | | | | |
|---|---|---|---|---|
| 5-19-95 | | | | |
| 3-29-96L | | | | |
| | | | | |
| | | | | |

THE LINCOLN ELECTRIC CO.
CLEVELAND, OHIO U.S.A.
SCALE NONE
DR. MLD DATE 03/23/94 CHK. BS SUP'S'D'G.

EQUIP. TYPE INVERTER WELDERS
SUBJECT SCHEMATIC, DARLINGTON DRIVE
SHT. NO. M17581

LINCOLN ELECTRIC
NOTE: Lincoln Electric assumes no responsibility for liablilities resulting from board level troubleshooting. PC Board repairs will invalidate your factory warranty. **Individual Printed Circuit Board Components are not available from Lincoln Electric.** This information is provided for reference only. Lincoln Electric discourages board level troubleshooting and repair since it may compromise the quality of the design and may result in danger to the Machine Operator or Technician. Improper PC board repairs could result in damage to the machine.



Return to Section TOC
Return to Master TOC

## PC Board Assembly - Darlington Drive - Codes 10151 - 10383 - (G2778)

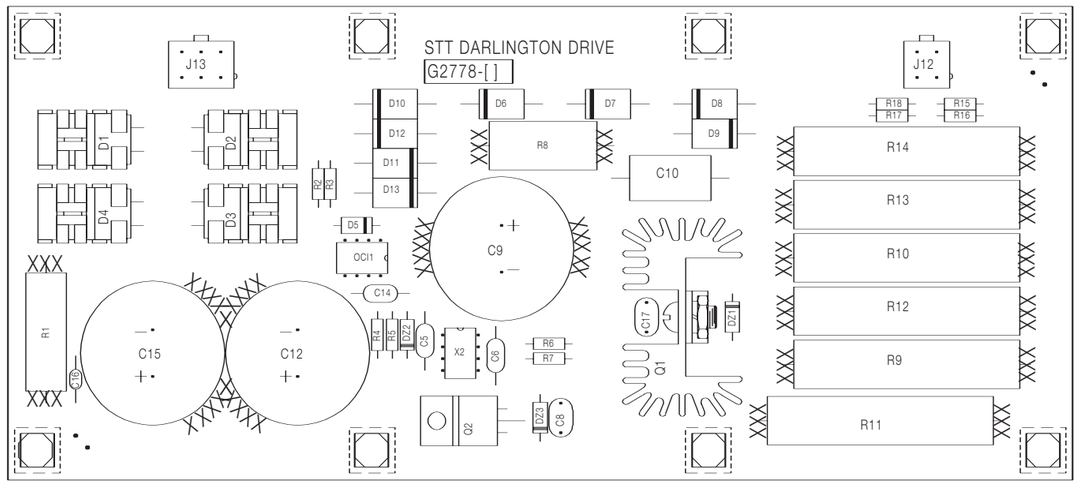


| ITEM | REQ'D | PART NO. | IDENTIFICATION |
|---|---|---|---|
| C5, C6, C14 | 3 | S16668-11 | .1/50 |
| C8, C17 | 2 | T11577-56 | 500pF, 1000V. CAPACITOR |
| C9, C12, C15 | 3 | S13490-92 | 3300/50 |
| C10 | 1 | S13490-94 | .33/200 |
| C16 | 1 | S16668-5 | .022/50 |
| | | | |
| D1, D2, D3, D4 | 4 | T12705-45 | DIODE |
| D5 | 1 | T12199-1 | 1N4004 |
| D6, D7, D8, D9, D10, D11, D12 D13 | 8 | T12705-14 | DIODE |
| | | | |
| DZ1, DZ3 | 2 | T12702-45 | 1N4746A |
| DZ2 | 1 | T12702-19 | 1N4742A |
| | | | |
| J12 | 1 | S18248-4 | HEADER |
| J13 | 1 | S18248-6 | HEADER |
| | | | |
| OCI1 | 1 | S15000-26 | OPTOCOUPLER, LOGIC-OUT |
| | | | |
| Q1 | 1 | S18105-7 | MOSFET HEAT SINK ASSEMBLY |
| Q2 | 1 | T12704-80 | 4A. 100V. MOSFET (SS) |
| | | | |
| R1 | 1 | T12300-81 | 5 WATT 0.5+/-1% OHM RESISTOR |
| R2, R3 | 2 | S19400-1501 | 1.5K 1/4W |
| R4 | 1 | S19400-3921 | 3.92K 1/4W |
| R5 | 1 | S19400-2670 | 267 1/4W |
| R6, R7 | 2 | S19400-10R0 | 10 1/4W |
| R8 | 1 | T14648-23 | 20 ohm 5 watt |
| R9, R10, R11, R12, R13, R14 | 6 | T14649-7 | 2.7 10W |
| R15, R16, R17, R18 | 4 | S19400-1001 | 1K 1/4W |
| | | | |
| X2 | 1 | S15018-12 | 8 PIN I.C. (SS) |

CAPACITORS = MFD/VOLTS
RESISTORS = OHMS

LINCOLN ELECTRIC **NOTE:** Lincoln Electric assumes no responsibility for liablilities resulting from board level troubleshooting. PC Board repairs will invalidate your factory warranty. **Individual Printed Circuit Board Components are not available from Lincoln Electric.** This information is provided for reference only. Lincoln Electric discourages board level troubleshooting and repair since it may compromise the quality of the design and may result in danger to the Machine Operator or Technician. Improper PC board repairs could result in damage to the machine.



Return to Section TOC
Return to Master TOC
Return to Section TOC
Return to Master TOC
Return to Section TOC
Return to Master TOC

## Schematic - IGBT Drive Board - Codes 11090 - 11116 - (L12144)

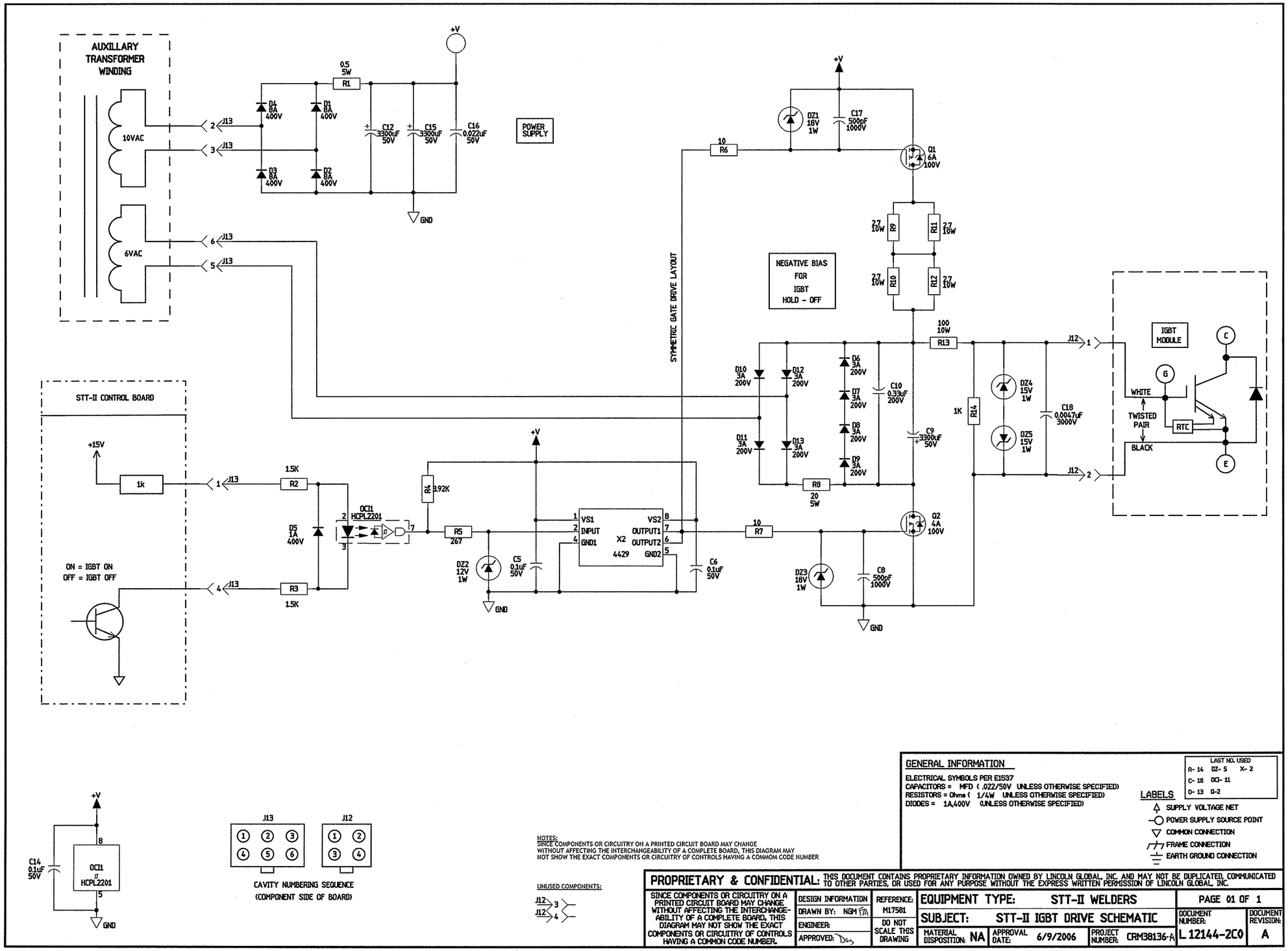


NOTE: Lincoln Electric assumes no responsibility for liablilities resulting from board level troubleshooting. PC Board repairs will invalidate your factory warranty. **Individual Printed Circuit Board Components are not available from Lincoln Electric.** This information is provided for reference only. Lincoln Electric discourages board level troubleshooting and repair since it may compromise the quality of the design and may result in danger to the Machine Operator or Technician. Improper PC board repairs could result in damage to the machine.



Return to Section TOC
Return to Master TOC

## PC Board Assembly - IGBT Drive - Codes 11090 - 11116 - (L12145)

L12145-2 | ENGINEERING CONTROLLED MANUFACTURER: No | CHANGE DETAIL: NEW

**P.C. BOARD BLANK INFORMATION**

MAKE FROM S19399 (MAKES 6 BOARDS PER PANEL,
SEE ELECTRONIC FILE FOR ADDITIONAL INFORMATION)

**BLANK PART NUMBER L12145-C**

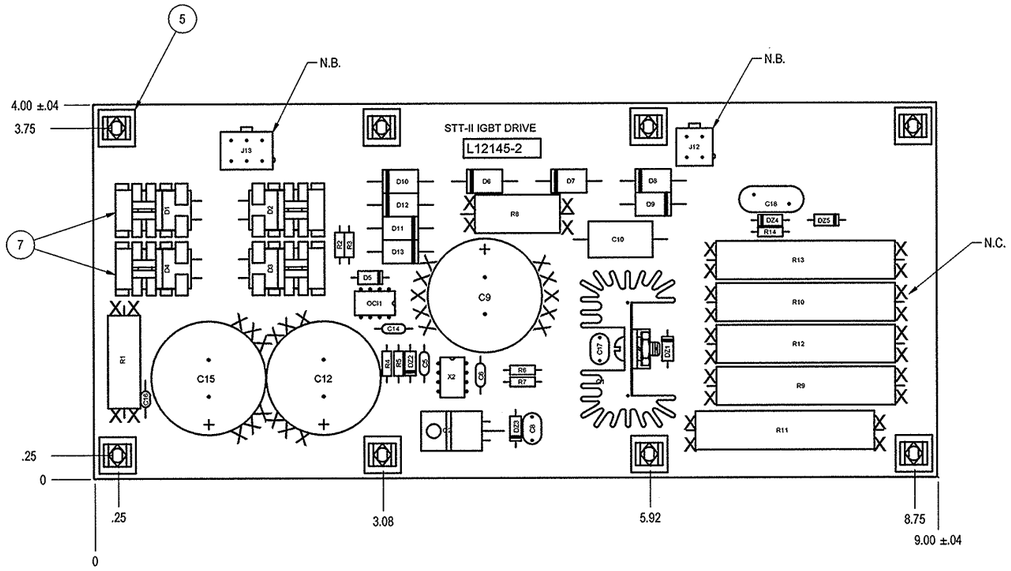


| | ITEM (USED WITH)* | QTY | PART NUMBER | DESCRIPTION |
|---|---|---|---|---|
| | 1 | 1 | SEE BLANK | PC BOARD BLANK |
| | 2 (Q1)* | 1 | CF000003 | 6-32 X .375 ROUND HEAD MACHINE SCREW |
| | 3 (Q1)* | 1 | E108A-13 | # 6 LOCK WASHER |
| | 4 (Q1)* | AS REQ | E1868 | THERMO JOINT COMPOUND |
| | 5 | 8 | S14020-5 | PLASTIC EXPANSION NUT, 0.38 |
| | 6 (Q1)* | 1 | S18104-1 | HEAT SINK,ALUMINUM,EXTRUDED,FOR 1 TO-220 |
| | 7 (D1, D2, D3, D4)* | 4 | S20590-1 | HEAT SINK,SLIP ON,FOR TO-220 |
| | 8 (Q1)* | 1 | T13746 | 6-32 HEX NUT |
| | 9 | 1.5 OZ | E2861 | SEALANT |
| | REFER TO ELECTRONIC COMPONENT DATABASE FOR SPECIFICATIONS ON ITEMS LISTED BELOW | | | |
| | **REFERENCES** | **QTY** | **PART NUMBER** | **DESCRIPTION** |
| | C5, C6, C14 | 3 | S16668-11 | CAPACITOR,CEMO,0.1, 50V,10% |
| | C8, C17 | 2 | T11577-56 | CAPACITOR,CD,500P,1000V,20% |
| N.C. | C9, C12, C15 | 3 | S13490-92 | CAPACITOR,ALEL,3300, 50V,+30/-10% |
| | C10 | 1 | S13490-94 | CAPACITOR,PEMF,0.33,200V,10% |
| | C16 | 1 | S16668-5 | CAPACITOR,CEMO,.022,50V,20% |
| | C18 | 1 | T11577-58K | CAPACITOR,CD,.0047,3000V,20% |
| | D1, D2, D3, D4 | 4 | T12705-45 | DIODE,TO220,8A,400V,NS8GT |
| | D5 | 1 | T12199-1 | DIODE,AXLDS,1A,400V |
| | D6, D7, D8, D9, D10, D11, D12, D13 | 8 | T12705-14 | DIODE,AXLDS,3A,200V,1N5402 |
| | DZ1, DZ3 | 2 | T12702-45 | ZENER DIODE,1W,18V,5%,1N4746A |
| | DZ2 | 1 | T12702-19 | ZENER DIODE,1W,12V,5%,1N4742A |
| | DZ4, DZ5 | 2 | T12702-29 | ZENER DIODE,1W,15V,5%,1N4744A |
| N.B. | J12 | 1 | S18248-4 | CONNECTOR,MOLEX,MINI,PCB,4-PIN |
| N.B. | J13 | 1 | S18248-6 | CONNECTOR,MOLEX,MINI,PCB,6-PIN |
| | OC1 | 1 | S15000-26 | OPTOCOUPLER,LOGIC-OUT,HCPL2201(SS) |
| N.A. | Q1 | 1 | T12704-111 | TRANSISTOR,PMF,TO220,6A,100V(SS) |
| N.A. | Q2 | 1 | T12704-80 | TRANSISTOR,NMF,TO220,4A,100V,IRF510(SS) |
| N.C. | R1 | 1 | T12300-81 | RESISTOR,WW,5W,0.5,1% |
| | R2, R3 | 2 | S19400-1501 | RESISTOR,MF,1/4W,1.50K,1% |
| | R4 | 1 | S19400-3921 | RESISTOR,MF,1/4W,3.92K,1% |
| | R5 | 1 | S19400-2670 | RESISTOR,MF,1/4W,267,1% |
| | R6, R7 | 2 | S19400-10R0 | RESISTOR,MF,1/4W,10.0,1% |
| N.C. | R8 | 1 | T14648-23 | RESISTOR,WW,5W,20,5%,SQ |
| N.C. | R9, R10, R11, R12 | 4 | T14649-7 | RESISTOR,WW,10W,2.7,5%,SQ |
| N.C. | R13 | 1 | T14649-4 | RESISTOR,WW,10W,100,5%,SQ |
| | R14 | 1 | S19400-1001 | RESISTOR,MF,1/4W,1.00K,1% |
| N.A. | X2 | 1 | S15018-12 | IC,CMOS,DRIVER,MOSFET,4429 |

CAPACITORS = MFD/VOLTS
RESISTORS = OHMS

MAKE PER E1911

ENCAPSULATE WITH E1844 (2 COATS)
TEST PER E4104
SCHEMATIC REFERENCE: L12144-2C0

MANUFACTURED AS:

L12145-2C0

IDENTIFICATION CODE

NOTES:

N.A. CAUTION: THIS DEVICE IS SUBJECT TO DAMAGE BY STATIC ELECTRICITY. SEE E2454 BEFORE HANDLING.

N.B. DO NOT COAT WITH ENCAPSULATION MATERIAL.

N.C. BEFORE ENCAPSULATION SECURE COMPONENTS TO P.C. BOARD WITH **ITEM 9**, AS SHOWN (20 PLACES).

**ALL COMPONENTS AND MATERIALS USED IN THIS ASSEMBLY ARE TO BE RoHS COMPLIANT PER E4253.**

EN-168

**PROPRIETARY & CONFIDENTIAL:** THIS DOCUMENT CONTAINS PROPRIETARY INFORMATION OWNED BY LINCOLN GLOBAL, INC. AND MAY NOT BE DUPLICATED, COMMUNICATED TO OTHER PARTIES OR USED FOR ANY PURPOSE WITHOUT THE EXPRESS WRITTEN PERMISSION OF LINCOLN GLOBAL, INC.

| | | | | | | |
|---|---|---|---|---|---|---|
| UNLESS OTHERWISE SPECIFIED TOLERANCE MANUFACTURING TOLERANCE PER E2056 ON 2 PLACE DECIMALS IS ± .02 ON 3 PLACE DECIMALS IS ± .002 ON ALL ANGLES IS ± .5 OF A DEGREE MATERIAL TOLERANCE ("*") TO AGREE WITH PUBLISHED STANDARDS. DO NOT SCALE THIS DRAWING | DESIGN INFORMATION | REFERENCE: L12145-1 | EQUIPMENT TYPE: STT II WELDERS | | PAGE 1 OF 1 | |
| | DRAWN BY: FEI 7/5 | | SUBJECT: IGBT DRIVE PC BD ASSEMBLY | | DOCUMENT NUMBER: L12145-2 | DOCUMENT REVISION: A |
| | ENGINEER: | SCALE: NONE | MATERIAL DISPOSITION: NA | APPROVAL DATE: 06/09/2006 | PROJECT NUMBER: CRM38136-A | |
| | APPROVED: DGS | | | | | |

SOLID EDGE

LINCOLN ELECTRIC **NOTE:** Lincoln Electric assumes no responsibility for liablilities resulting from board level troubleshooting. PC Board repairs will invalidate your factory warranty. **Individual Printed Circuit Board Components are not available from Lincoln Electric.** This information is provided for reference only. Lincoln Electric discourages board level troubleshooting and repair since it may compromise the quality of the design and may result in danger to the Machine Operator or Technician. Improper PC board repairs could result in damage to the machine.



Return to Section TOC Return to Master TOC

## Schematic - Switch Board - All Codes - (L8440)

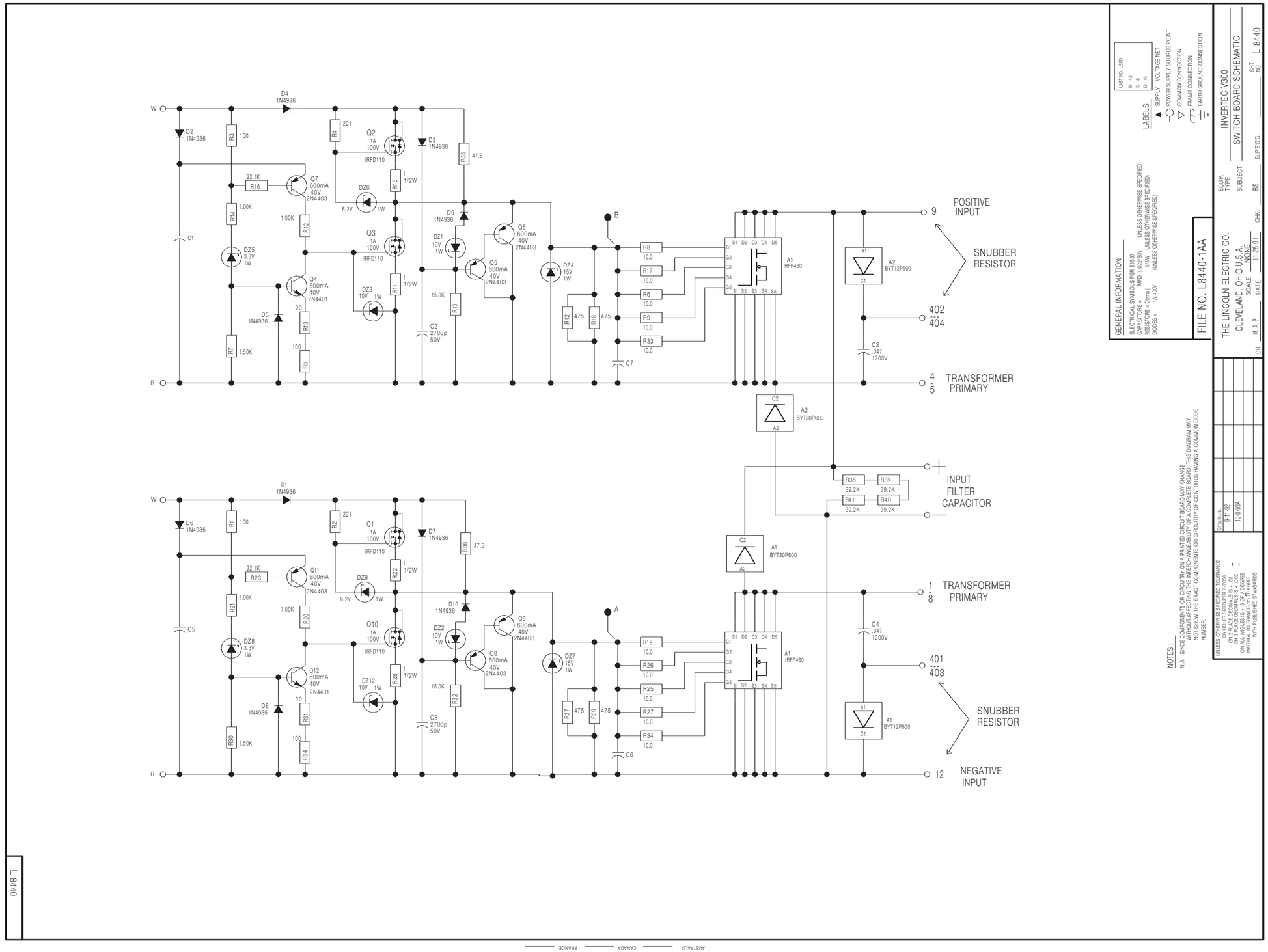


LINCOLN ELECTRIC

**NOTE:** Lincoln Electric assumes no responsibility for liablilities resulting from board level troubleshooting. PC Board repairs will invalidate your factory warranty. **Individual Printed Circuit Board Components are not available from Lincoln Electric.** This information is provided for reference only. Lincoln Electric discourages board level troubleshooting and repair since it may compromise the quality of the design and may result in danger to the Machine Operator or Technician. Improper PC board repairs could result in damage to the machine.



Return to Section TOC
Return to Master TOC

## PC Board Assembly - Switch - All Codes - (L8441)

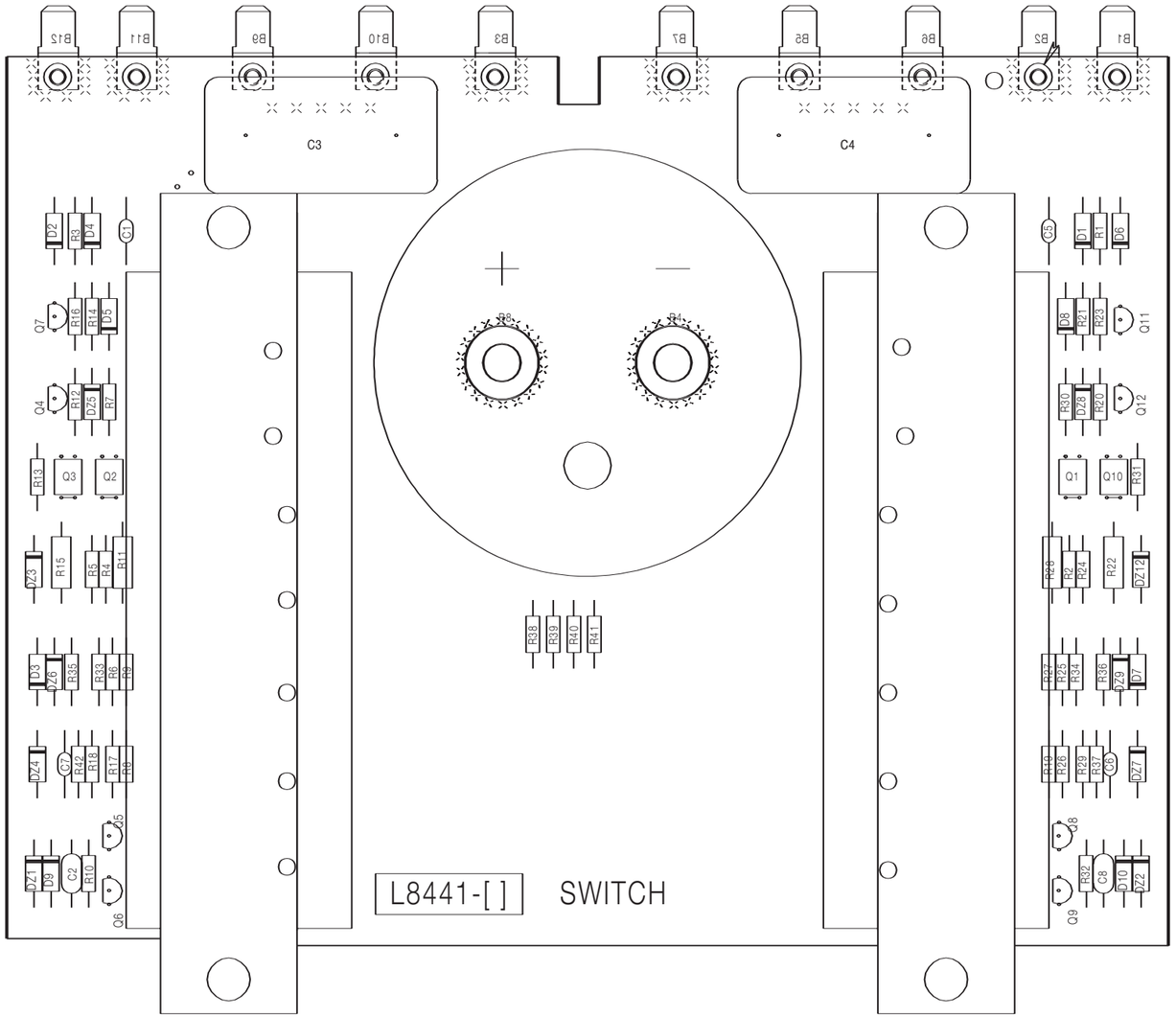


| ITEM | REQ'D | PART NO. | IDENTIFICATION |
|---|---|---|---|
| C1, C5, C6, C7 | 4 | S16668-5 | .022/50 |
| C2, C8 | 2 | S16668-4 | 2700pF/50 |
| C3, C4 | 2 | S13490-112 | .047/1200 |
| D1, D2, D3, D4, D5, D6, D7, D8, D9, D10 | 10 | T12705-34 | 1N4936 |
| DZ1, DZ2, DZ3, DZ12 | 4 | T12702-27 | 1N4740 |
| DZ4, DZ7 | 2 | T12702-29 | 1N4744A |
| DZ6, DZ9 | 2 | T12702-40 | 1N4735 |
| DZ5, DZ8 | 2 | T12702-53 | 3.3V 1W |
| Q1, Q2, Q3, Q10 | 4 | T12704-73 | IC PKG MOSFET |
| Q4, Q12 | 2 | T12704-68 | 2N4401 |
| Q5, Q6, Q7, Q8, Q9, Q11 | 6 | T12704-69 | 2N4403 |
| R1, R3, R5, R24 | 4 | S19400-1000 | 100 1/4W |
| R2, R4 | 2 | S19400-2210 | 221 1/4W |
| R6, R8, R9, R17, R19, R25 R26, R27, R33, R34 | 10 | S19400-10R0 | 10 1/4W |
| R7, R30 | 2 | S19400-1501 | 1.5K 1/4W |
| R10, R32 | 2 | S19400-1502 | 15K 1/4W |
| R11, R15, R22, R28 | 4 | T14231-20 | 1 1/2W |
| R12, R14, R20, R21 | 4 | S19400-1001 | 1K 1/4W |
| R13, R31 | 2 | S19400-20R0 | 20 1/4W |
| R16, R23 | 2 | S19400-2212 | 22.1K 1/4W |
| R18, R29, R37, R42 | 4 | S19400-4750 | 475 1/4W |
| R35, R36 | 2 | S19400-47R5 | 47.5 1/4W |
| R38, R39, R40, R41 | 4 | S19400-3922 | 39.2K 1/4W |

LINCOLN ELECTRIC

**NOTE:** Lincoln Electric assumes no responsibility for liablilities resulting from board level troubleshooting. PC Board repairs will invalidate your factory warranty. **Individual Printed Circuit Board Components are not available from Lincoln Electric.** This information is provided for reference only. Lincoln Electric discourages board level troubleshooting and repair since it may compromise the quality of the design and may result in danger to the Machine Operator or Technician. Improper PC board repairs could result in damage to the machine.



Return to Section TOC
Return to Master TOC
Return to Section TOC
Return to Master TOC
Return to Section TOC
Return to Master TOC

**Schematic - Driver Board - All Codes - (S20799)**

S 20799

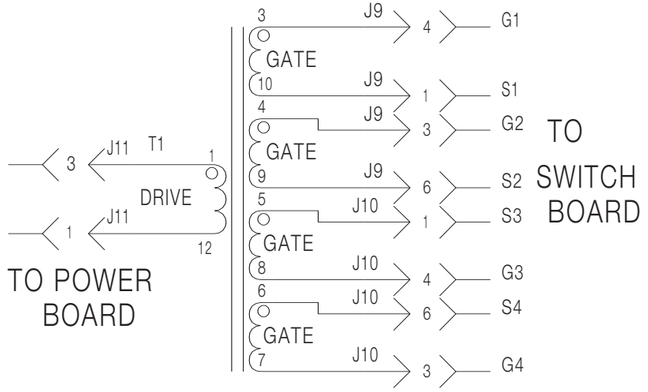


Power Switch Drive Transformer

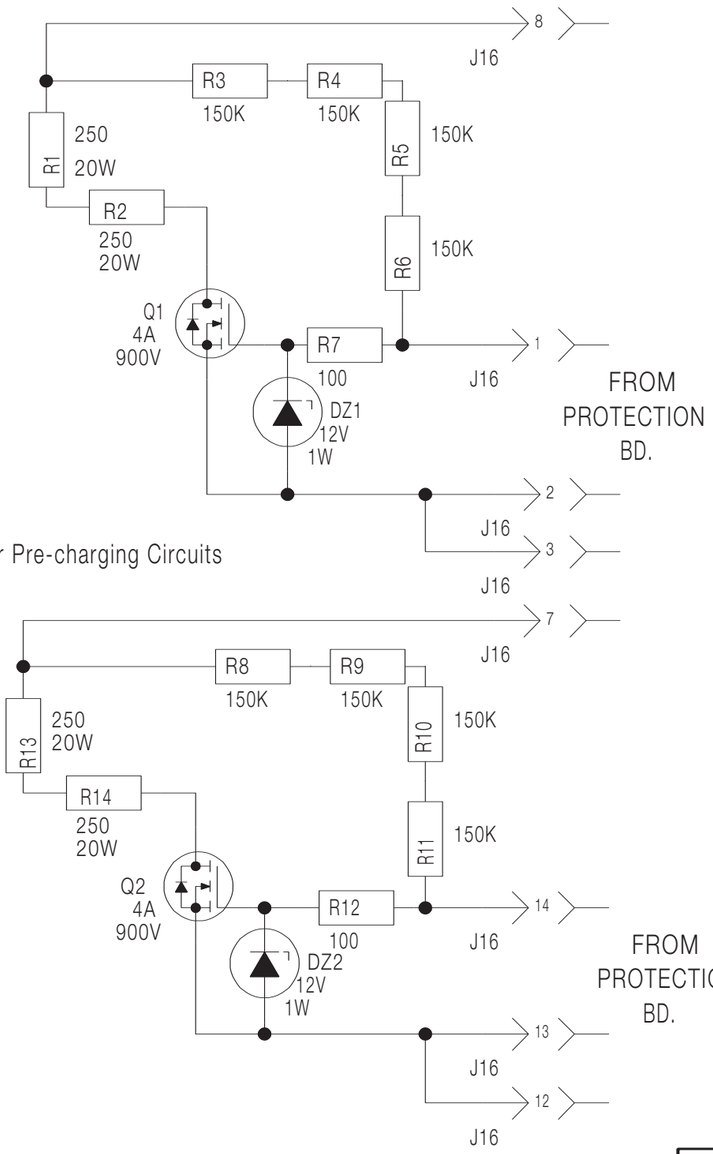


Capacitor Pre-charging Circuits

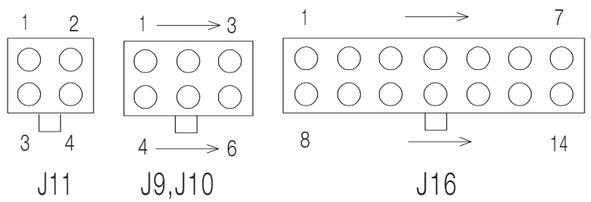


NOTES :

N.A. SINCE COMPONENTS OR CIRCUITRY ON A PRINTED CIRCUIT BOARD MAY CHANGE WITHOUT AFFECTING THE INTERCHANGEABILITY OF A COMPLETE BOARD, THIS DIAGRAM MAY NOT SHOW THE EXACT COMPONENTS OR CIRCUITRY OF CONTROLS HAVING A COMMON CODE NUMBER.

FILE: S20799-1AA

| | | | | |
|---|---|---|---|---|
| UNLESS OTHERWISE SPECIFIED TOLERANCE ON HOLES SIZES PER E-2056 ON 2 PLACE DECIMALS IS + .02 ON 3 PLACE DECIMALS IS + .002 ON ALL ANGLES IS + .5 OF A DEGREE MATERIAL TOLERANCE (*t*) TO AGREE WITH PUBLISHED STANDARDS | Ch'ge.Sht.No. | | | |
| | 6-25-93C | | | |
| | | | | |
| | | | | |
| | | | | |

THE LINCOLN ELECTRIC CO.
CLEVELAND, OHIO U.S.A.

EQUIP. TYPE: INVERTER WELDERS

SUBJECT: SCHEMATIC, DRIVER BOARD

SCALE NONE

DR. LC DATE 11-4-92 CHK. BS SUP'S'D'G. _____ SHT. NO. S 20799

LINCOLN ELECTRIC

**NOTE:** Lincoln Electric assumes no responsibility for liablilities resulting from board level troubleshooting. PC Board repairs will invalidate your factory warranty. **Individual Printed Circuit Board Components are not available from Lincoln Electric.** This information is provided for reference only. Lincoln Electric discourages board level troubleshooting and repair since it may compromise the quality of the design and may result in danger to the Machine Operator or Technician. Improper PC board repairs could result in damage to the machine.



Return to Section TOC
Return to Master TOC

## PC Board Assembly - Driver - All Codes - (L9134)

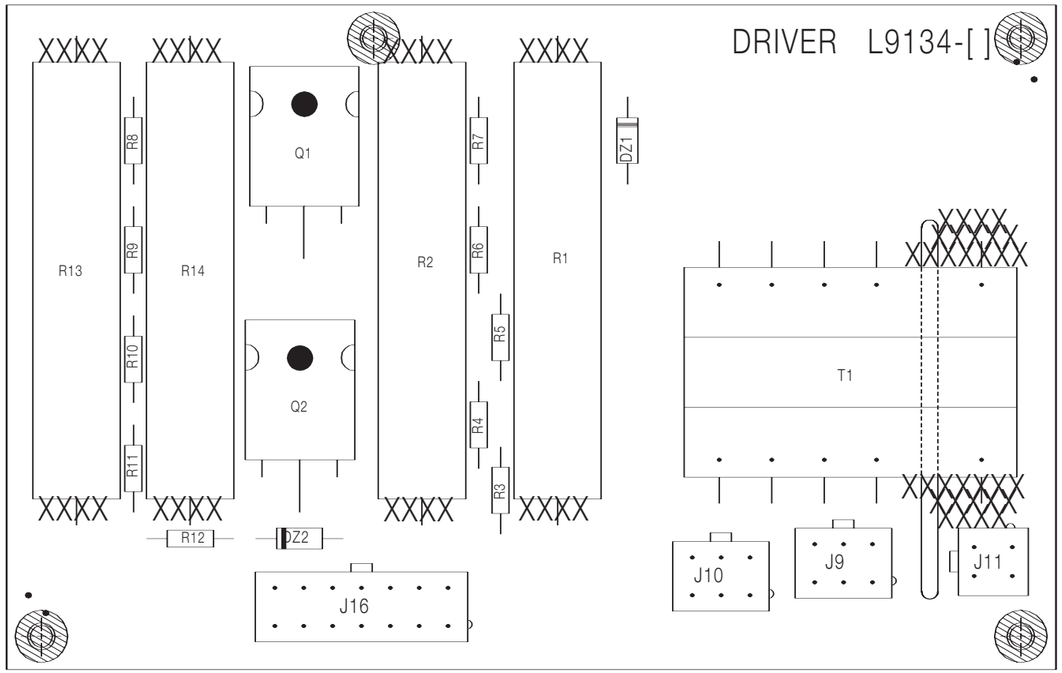


| ITEM | REQ'D | PART NO. | IDENTIFICATION |
|---|---|---|---|
| DZ1, DZ2 | 2 | T12702-19 | 1N4742A |
| J9, J10 | 2 | S18248-6 | HEADER |
| J11 | 1 | S18248-4 | HEADER |
| J16 | 1 | S18248-14 | HEADER |
| Q1, Q2 | 2 | T12704-75 | FET (SS) |
| R1, R2, R13, R14 | 4 | T12300-73 | 250 20W |
| R3, R4, R5, R6, R8, R9, R10, R11 | 8 | S19400-1503 | 150K 1/4W |
| R7, R12 | 2 | S19400-1000 | 100 1/4W |
| T1 | 1 | S13000-46 | TRANSFORMER |

RESISTORS = OHMS/WATTS
CAPACITORS = MFD/VOLTS
INDUCTANCE = HENRYS

LINCOLN ELECTRIC

**NOTE:** Lincoln Electric assumes no responsibility for liablilities resulting from board level troubleshooting. PC Board repairs will invalidate your factory warranty. **Individual Printed Circuit Board Components are not available from Lincoln Electric.** This information is provided for reference only. Lincoln Electric discourages board level troubleshooting and repair since it may compromise the quality of the design and may result in danger to the Machine Operator or Technician. Improper PC board repairs could result in damage to the machine.



Return to Section TOC
Return to Master TOC

## Schematic - Protection PC Board - Codes 10151 - 11092 - (M16097)

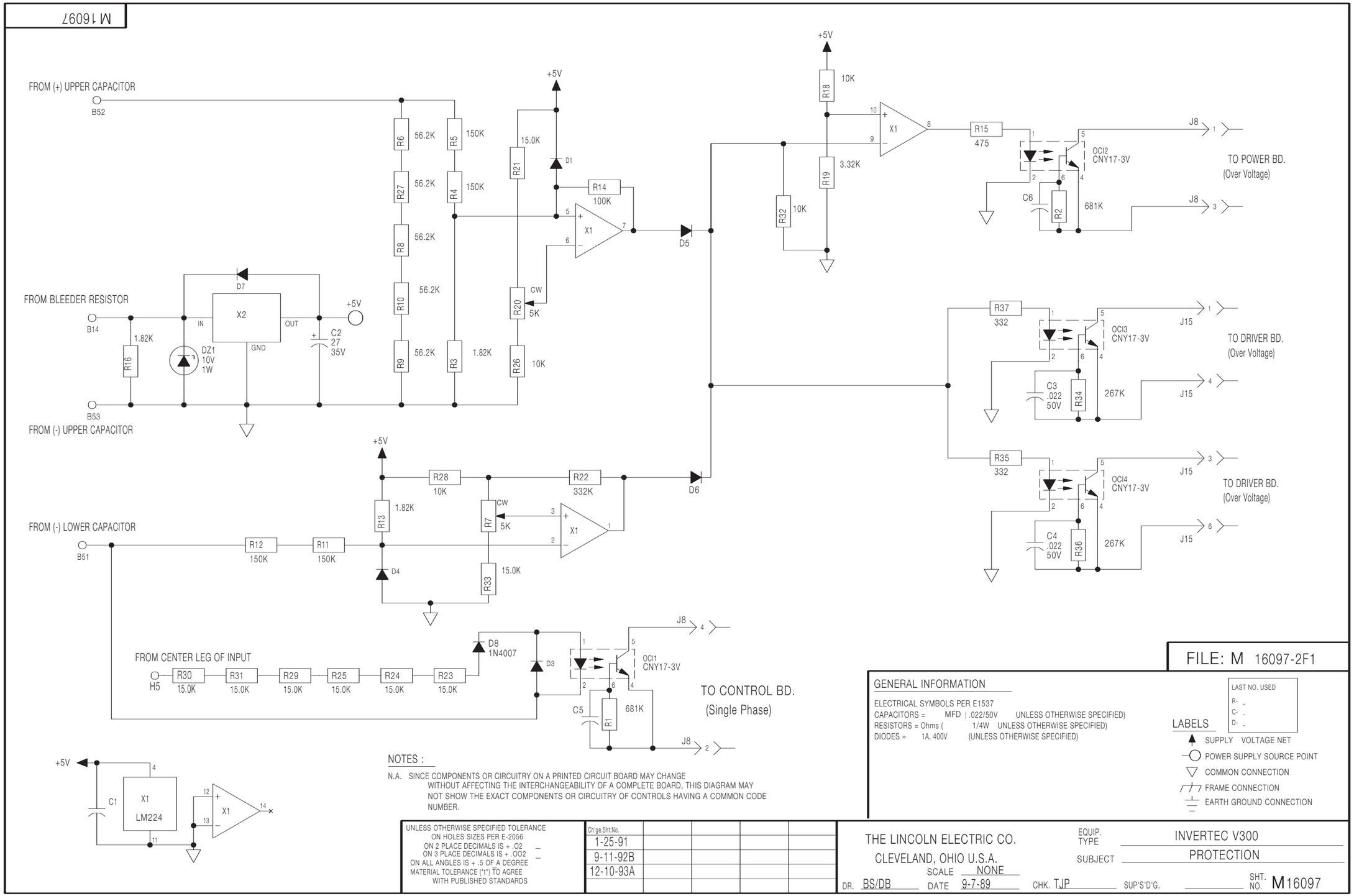


NOTES :

N.A. SINCE COMPONENTS OR CIRCUITRY ON A PRINTED CIRCUIT BOARD MAY CHANGE WITHOUT AFFECTING THE INTERCHANGEABILITY OF A COMPLETE BOARD, THIS DIAGRAM MAY NOT SHOW THE EXACT COMPONENTS OR CIRCUITRY OF CONTROLS HAVING A COMMON CODE NUMBER.

FILE: M 16097-2F1

GENERAL INFORMATION

ELECTRICAL SYMBOLS PER E1537
CAPACITORS = MFD ( .022/50V UNLESS OTHERWISE SPECIFIED)
RESISTORS = Ohms ( 1/4W UNLESS OTHERWISE SPECIFIED)
DIODES = 1A, 400V (UNLESS OTHERWISE SPECIFIED)

LAST NO. USED
R- _
C- _
D- _

LABELS
- SUPPLY VOLTAGE NET
- POWER SUPPLY SOURCE POINT
- COMMON CONNECTION
- FRAME CONNECTION
- EARTH GROUND CONNECTION

UNLESS OTHERWISE SPECIFIED TOLERANCE
ON HOLES SIZES PER E-2056
ON 2 PLACE DECIMALS IS + .02 _
ON 3 PLACE DECIMALS IS + .002 _
ON ALL ANGLES IS + .5 OF A DEGREE
MATERIAL TOLERANCE (*t*) TO AGREE WITH PUBLISHED STANDARDS

| Ch'ge.Sht.No. | | | | |
|---|---|---|---|---|
| 1-25-91 | | | | |
| 9-11-92B | | | | |
| 12-10-93A | | | | |
| | | | | |

THE LINCOLN ELECTRIC CO.
CLEVELAND, OHIO U.S.A.
SCALE NONE
DR. BS/DB DATE 9-7-89 CHK. TJP SUP'S'D'G.

EQUIP. TYPE INVERTEC V300
SUBJECT PROTECTION
SHT. NO. M16097

LINCOLN ELECTRIC
NOTE: Lincoln Electric assumes no responsibility for liablilities resulting from board level troubleshooting. PC Board repairs will invalidate your factory warranty. **Individual Printed Circuit Board Components are not available from Lincoln Electric.** This information is provided for reference only. Lincoln Electric discourages board level troubleshooting and repair since it may compromise the quality of the design and may result in danger to the Machine Operator or Technician. Improper PC board repairs could result in damage to the machine.



Return to Section TOC
Return to Master TOC
Return to Section TOC
Return to Master TOC
Return to Section TOC
Return to Master TOC

## PC Board Assembly - Protection - Codes 10151 - 11092 - (L7915)

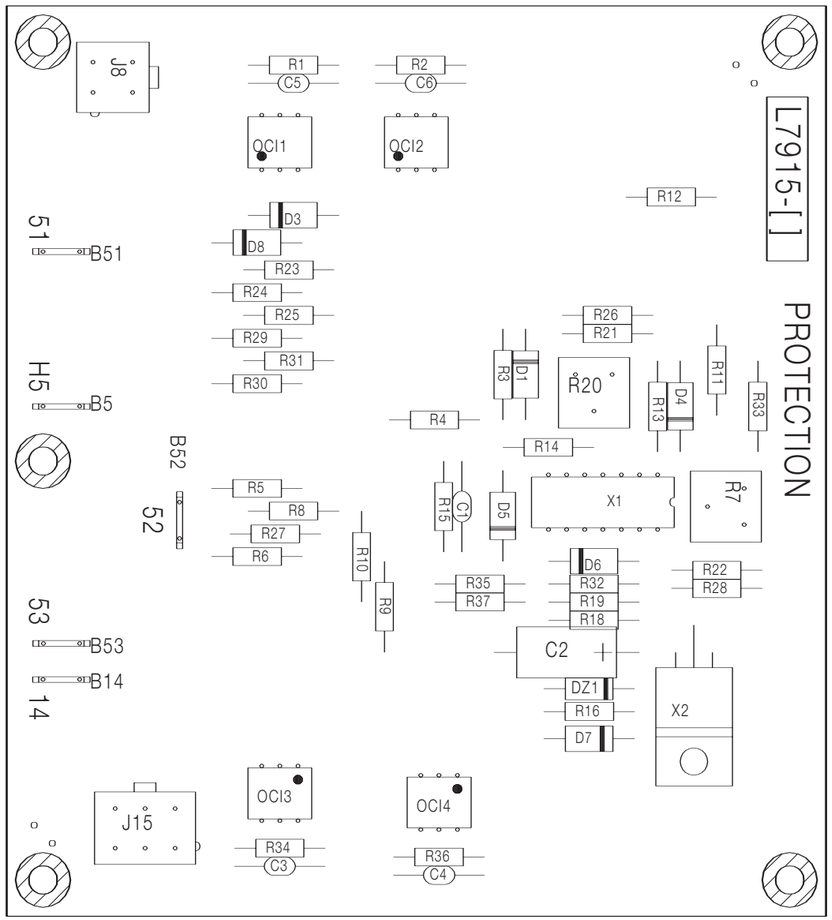


| ITEM | REQ'D | PART NO. | IDENTIFICATION |
|---|---|---|---|
| | | | |
| C1, C3, C4, C5, C6 | 5 | S16668-5 | .022/50 |
| C2 | 1 | S13490-93 | 27/35 |
| D1, D3, D4, D5, D6, D7 | 6 | T12199-1 | 1N4004 |
| D8 | 1 | T12199-2 | 1N4007 |
| DZ1 | 1 | T12702-27 | 1N4740 |
| | | | |
| | | | |
| OCI1, OCI2, OCI3, OCI4 | 4 | S15000-22 | OPTO ISOLATOR |
| R1, R2 | 2 | S19400-6813 | 681K 1/4W |
| R3, R13, R16 | 3 | S19400-1821 | 1.82K , 1/4W |
| R4, R5, R11, R12 | 4 | S19400-1503 | 150K 1/4W |
| R6, R8, R9, R10, R27 | 5 | S19400-5622 | 56.2K 1/4W |
| R7, R20 | 2 | T10812-36 | 5K 1/2W TRIMMER |
| R14 | 1 | S19400-1003 | 100K 1/4W |
| R15 | 1 | S19400-4750 | 475 1/4W |
| R18, R26, R28, R32 | 4 | S19400-1002 | 10K 1/4W |
| R19 | 1 | S19400-3321 | 3.32K 1/4W |
| R21, R23, R24, R25, R29, R30 R31, R33 | 8 | S19400-1502 | 15K 1/4W |
| R22 | 1 | S19400-3323 | 332K 1/4W |
| R34, R36 | 2 | S19400-2673 | 267K 1/4W |
| R35, R37 | 2 | S19400-3320 | 332 1/4W |
| | | | |
| X1 | 1 | S15128-4 | LM224 OP-AMP |
| X2 | 1 | S15128-5 | +5V REG. |

LINCOLN ELECTRIC

**NOTE:** Lincoln Electric assumes no responsibility for liablilities resulting from board level troubleshooting. PC Board repairs will invalidate your factory warranty. **Individual Printed Circuit Board Components are not available from Lincoln Electric.** This information is provided for reference only. Lincoln Electric discourages board level troubleshooting and repair since it may compromise the quality of the design and may result in danger to the Machine Operator or Technician. Improper PC board repairs could result in damage to the machine.



Return to Section TOC
Return to Master TOC
Return to Section TOC
Return to Master TOC
Return to Section TOC
Return to Master TOC

## Schematic - Protection PC Board - Codes 11115 - 11116 - (M20352)

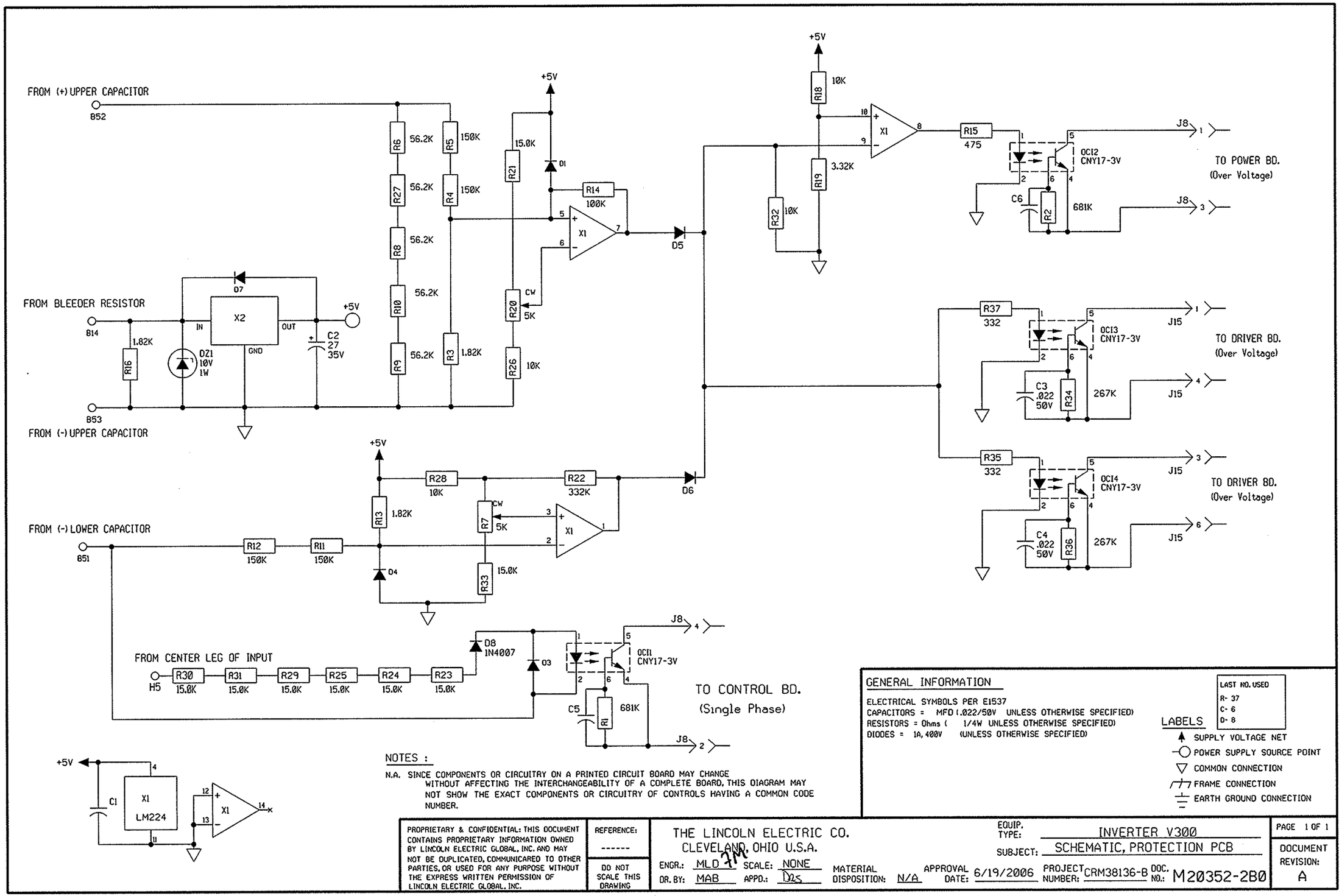


NOTES :

N.A. SINCE COMPONENTS OR CIRCUITRY ON A PRINTED CIRCUIT BOARD MAY CHANGE WITHOUT AFFECTING THE INTERCHANGEABILITY OF A COMPLETE BOARD, THIS DIAGRAM MAY NOT SHOW THE EXACT COMPONENTS OR CIRCUITRY OF CONTROLS HAVING A COMMON CODE NUMBER.

GENERAL INFORMATION

ELECTRICAL SYMBOLS PER E1537
CAPACITORS = MFD (.022/50V UNLESS OTHERWISE SPECIFIED)
RESISTORS = Ohms ( 1/4W UNLESS OTHERWISE SPECIFIED)
DIODES = 1A, 400V (UNLESS OTHERWISE SPECIFIED)

LAST NO. USED
R- 37
C- 6
D- 8

LABELS
- SUPPLY VOLTAGE NET
- POWER SUPPLY SOURCE POINT
- COMMON CONNECTION
- FRAME CONNECTION
- EARTH GROUND CONNECTION

PROPRIETARY & CONFIDENTIAL: THIS DOCUMENT CONTAINS PROPRIETARY INFORMATION OWNED BY LINCOLN ELECTRIC GLOBAL, INC. AND MAY NOT BE DUPLICATED, COMMUNICATED TO OTHER PARTIES, OR USED FOR ANY PURPOSE WITHOUT THE EXPRESS WRITTEN PERMISSION OF LINCOLN ELECTRIC GLOBAL, INC.

REFERENCE: ------

DO NOT SCALE THIS DRAWING

THE LINCOLN ELECTRIC CO.
CLEVELAND, OHIO U.S.A.

ENGR.: MLD SCALE: NONE
DR. BY: MAB APPD.: DJS
MATERIAL DISPOSITION: N/A
APPROVAL DATE: 6/19/2006
PROJECT NUMBER: CRM38136-B
DOC. NO.: M20352-2B0
EQUIP. TYPE: INVERTER V300
SUBJECT: SCHEMATIC, PROTECTION PCB

PAGE 1 OF 1
DOCUMENT REVISION: A

LINCOLN ELECTRIC

NOTE: Lincoln Electric assumes no responsibility for liablilities resulting from board level troubleshooting. PC Board repairs will invalidate your factory warranty. **Individual Printed Circuit Board Components are not available from Lincoln Electric.** This information is provided for reference only. Lincoln Electric discourages board level troubleshooting and repair since it may compromise the quality of the design and may result in danger to the Machine Operator or Technician. Improper PC board repairs could result in damage to the machine.



Return to Section TOC
Return to Master TOC

## PC Board Assembly - Protection - Codes 11115 - 11116 - (L12235)

L12235-2 | ENGINEERING CONTROLLED | CHANGE DETAIL: NEW
MANUFACTURER: No

**P.C. BOARD BLANK INFORMATION**

MAKE FROM S19399 (MAKES 8 BOARDS PER PANEL,
SEE ELECTRONIC FILE FOR ADDITIONAL INFORMATION)

BLANK PART NUMBER L12235-B

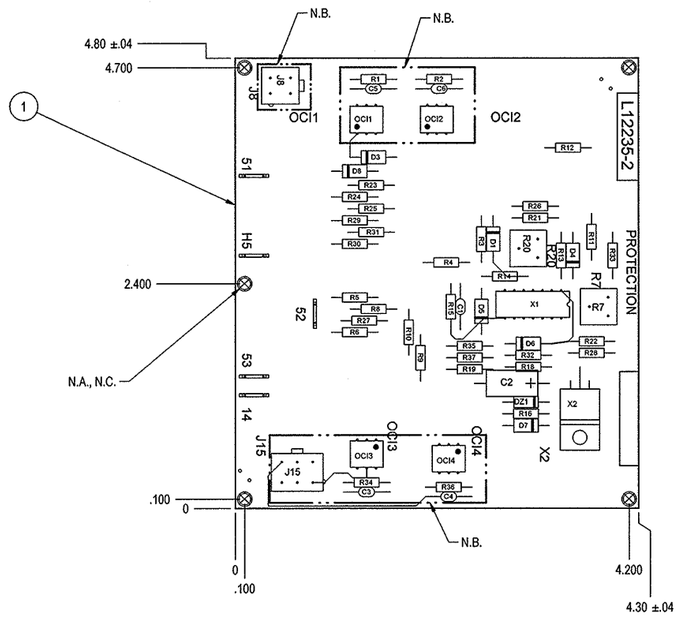


| | ITEM | REQ'D | PART NO. | IDENTIFICATION |
|---|---|---|---|---|
| | B5,B14,B51,B52,B53 | 5 | T13157-14 | TAB TERMINAL |
| | C1,C3,C4,C5,C6 | 5 | S16668-5 | .022/50 |
| | C2 | 1 | S13490-93 | 27/35 |
| | D1,D3,D4,D5,D6,D7 | 6 | T12199-1 | 1N4004 |
| | D8 | 1 | T12199-2 | 1N4007 |
| | DZ1 | 1 | T12702-27 | 1N4740 |
| N.C. | J8 | 1 | S18248-4 | HEADER |
| N.C. | J15 | 1 | S18248-6 | HEADER |
| | OCI1,OCI2,OCI3,OCI4 | 4 | S15000-22 | OPTO ISOLATOR |
| | R1,R2 | 2 | S19400-6813 | 681K 1/4W |
| | | | | |
| | R4,R5,R11,R12 | 4 | S19400-1503 | 150K 1/4W |
| | R6,R8,R9,R10,R27 | 5 | S19400-5622 | 56.2K 1/4W |
| | R7,R20 | 2 | T10812-36 | 5K 1/2W TRIMMER |
| | R14 | 1 | S19400-1003 | 100K 1/4W |
| | R15 | 1 | S19400-4750 | 475 1/4W |
| | R3,R13,R16 | 3 | S19400-1821 | 1.82K 1/4W |
| | R18,R26,R28,R32 | 4 | S19400-1002 | 10K 1/4W |
| | R19 | 1 | S19400-3321 | 3.32K 1/4W |
| | R21,R23,R24,R25,R29,R30 R31,R33 | 8 | S19400-1502 | 15K 1/4W |
| | R22 | 1 | S19400-3323 | 332K 1/4W |
| | R34,R36 | 2 | S19400-2673 | 267K 1/4W |
| | R35,R37 | 2 | S19400-3320 | 332 1/4W |
| | X1 | 1 | S15128-4 | IC,LM224,OP-AMP |
| | X2 | 1 | S15128-5 | +5V REG. |

CAPACITORS = MFD/VOLTS
INDUCTANCE = HENRIES
RESISTANCE = OHMS

| ITEM | REQ'D | PART NO. | DESCRIPTION |
|---|---|---|---|
| 1 | 1 | SEE BLANK INFO. | P.C. BOARD BLANK |
| 2 | 1.2 oz. | E2861 | SEALANT |

MANUFACTURED AS:

**L12235-2B0**

IDENTIFICATION CODE

MAKE PER E1911
ENCAPSULATE WITH E1844 (2 COATS)
TEST PER E4117-PR

SCHEMATIC REFERENCE: M20352-2B0

NOTES:

N.A. MOUNTING HOLES TO BE FREE OF ENCAPSULATION MATERIAL (5 PLACES).

N.B. COVER THIS AREA TOP & BOTTOM WITH ITEM 2 . FILL SLOT COMPLETELY. ITEM 2 IS TO FILL AREA BETWEEN UNDERSIDE OF COMPONENT & PC BOARD WITH NO VOIDS.

N.C. DO NOT COAT WITH ENCAPSULATION.

**ALL COMPONENTS AND MATERIALS USED IN THIS ASSEMBLY ARE TO BE RoHS COMPLIANT PER E4253.**

FOR PARTS ORDERS:
PERFORM "PARTS ORDERS"
TEST PER E4117-PR-A [PAGE 2]

**PROPRIETARY & CONFIDENTIAL:** THIS DOCUMENT CONTAINS PROPRIETARY INFORMATION OWNED BY LINCOLN GLOBAL, INC. AND MAY NOT BE DUPLICATED, COMMUNICATED TO OTHER PARTIES OR USED FOR ANY PURPOSE WITHOUT THE EXPRESS WRITTEN PERMISSION OF LINCOLN GLOBAL, INC.

| | | | | | | | |
|---|---|---|---|---|---|---|---|
| UNLESS OTHERWISE SPECIFIED TOLERANCE MANUFACTURING TOLERANCE PER E2056 ON 2 PLACE DECIMALS IS ± .02 ON 3 PLACE DECIMALS IS ± .002 ON ALL ANGLES IS ± .5 OF A DEGREE MATERIAL TOLERANCE (*1) TO AGREE WITH PUBLISHED STANDARDS. DO NOT SCALE THIS DRAWING | DESIGN INFORMATION | REFERENCE: L12235-1 | EQUIPMENT TYPE: INVERTER WELDERS | | | PAGE 1 OF 1 | |
| | DRAWN BY: FBI | | SUBJECT: PROTECTION PC BOARD ASSEMBLY | | | DOCUMENT NUMBER: L12235-2 | DOCUMENT REVISION: A |
| | ENGINEER: | SCALE: 1:1 | MATERIAL DISPOSITION: NA | APPROVAL DATE: 06/19/2006 | PROJECT NUMBER: CRM38136-B | | |
| | APPROVED: | | | | | | |

EN-168

SOLID EDGE

LINCOLN ELECTRIC **NOTE:** Lincoln Electric assumes no responsibility for liablilities resulting from board level troubleshooting. PC Board repairs will invalidate your factory warranty. **Individual Printed Circuit Board Components are not available from Lincoln Electric.** This information is provided for reference only. Lincoln Electric discourages board level troubleshooting and repair since it may compromise the quality of the design and may result in danger to the Machine Operator or Technician. Improper PC board repairs could result in damage to the machine.



Return to Section TOC Return to Master TOC

## Schematic - Current Sense PC Board - All Codes - (S21410)

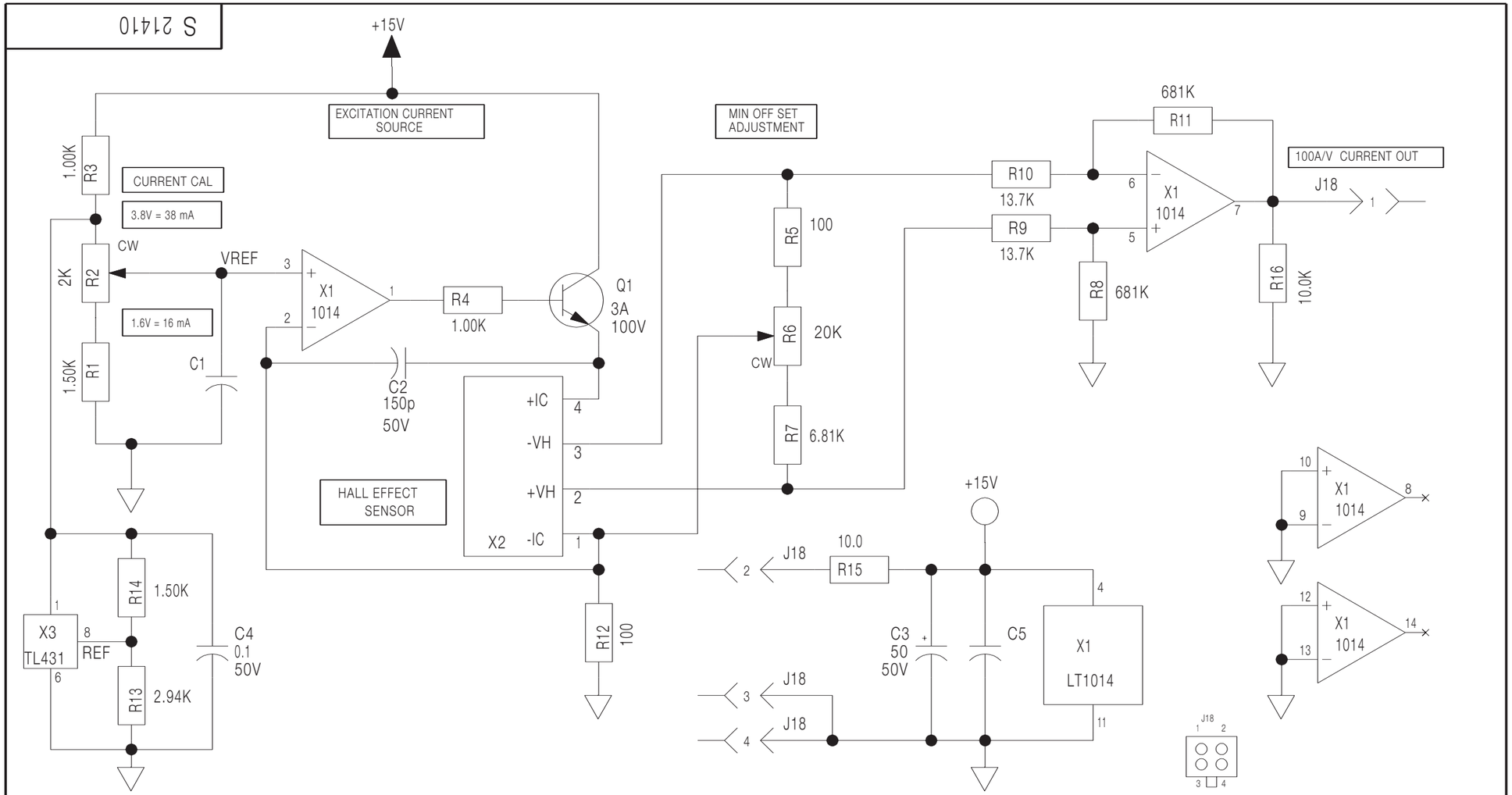


THIS SHEET CONTAINS PROPRIETARY INFORMATION OWNED BY THE LINCOLN ELECTRIC CO. AND IS NOT TO BE REPRODUCED, DISCLOSED OR USED WITHOUT THE EXPRESS PERMISSION OF THE LINCOLN ELECTRIC CO.

FILE: S21410_1BA

NOTES :

N.A. SINCE COMPONENTS OR CIRCUITRY ON A PRINTED CIRCUIT BOARD MAY CHANGE WITHOUT AFFECTING THE INTERCHANGEABILITY OF A COMPLETE BOARD. THIS DIAGRAM MAY NOT SHOW THE EXACT COMPONENTS OR CIRCUITRY OF CONTROLS HAVING A COMMON CODE NUMBER.

GENERAL INFORMATION

ELECTRICAL SYMBOLS PER E1537
CAPACITORS = MFD ( .022/50V UNLESS OTHERWISE SPECIFIED)
RESISTORS = Ohms ( 1/4W UNLESS OTHERWISE SPECIFIED)
DIODES = 1A, 400V (UNLESS OTHERWISE SPECIFIED)

LABELS

SUPPLY VOLTAGE NET
POWER SUPPLY SOURCE POINT
COMMON CONNECTION
FRAME CONNECTION
EARTH GROUND CONNECTION

UNLESS OTHERWISE SPECIFIED TOLERANCE
ON HOLES SIZES PER E-2056
ON 2 PLACE DECIMALS IS + .02
ON 3 PLACE DECIMALS IS + .002
ON ALL ANGLES IS + .5 OF A DEGREE
MATERIAL TOLERANCE ("t") TO AGREE
WITH PUBLISHED STANDARDS

| Ch'ge.Sht.No. | | | |
|---|---|---|---|
| 5-19-95 | | | |
| 9-27-96F | | | |
| 11-15-96E | | | |
| | | | |

THE LINCOLN ELECTRIC CO.
CLEVELAND, OHIO U.S.A.

EQUIP. TYPE: STT-CURRENT SENSE
SUBJECT: SCHEMATIC
SCALE: NONE
DR. MLD DATE 03/21/94 CHK. FV SUP'S'D'G. SHT. NO. S 21410

NOTE: Lincoln Electric assumes no responsibility for liablilities resulting from board level troubleshooting. PC Board repairs will invalidate your factory warranty. **Individual Printed Circuit Board Components are not available from Lincoln Electric.** This information is provided for reference only. Lincoln Electric discourages board level troubleshooting and repair since it may compromise the quality of the design and may result in danger to the Machine Operator or Technician. Improper PC board repairs could result in damage to the machine.



Return to Section TOC
Return to Master TOC

## PC Board Assembly - Current Sense - All Codes - (M17591)

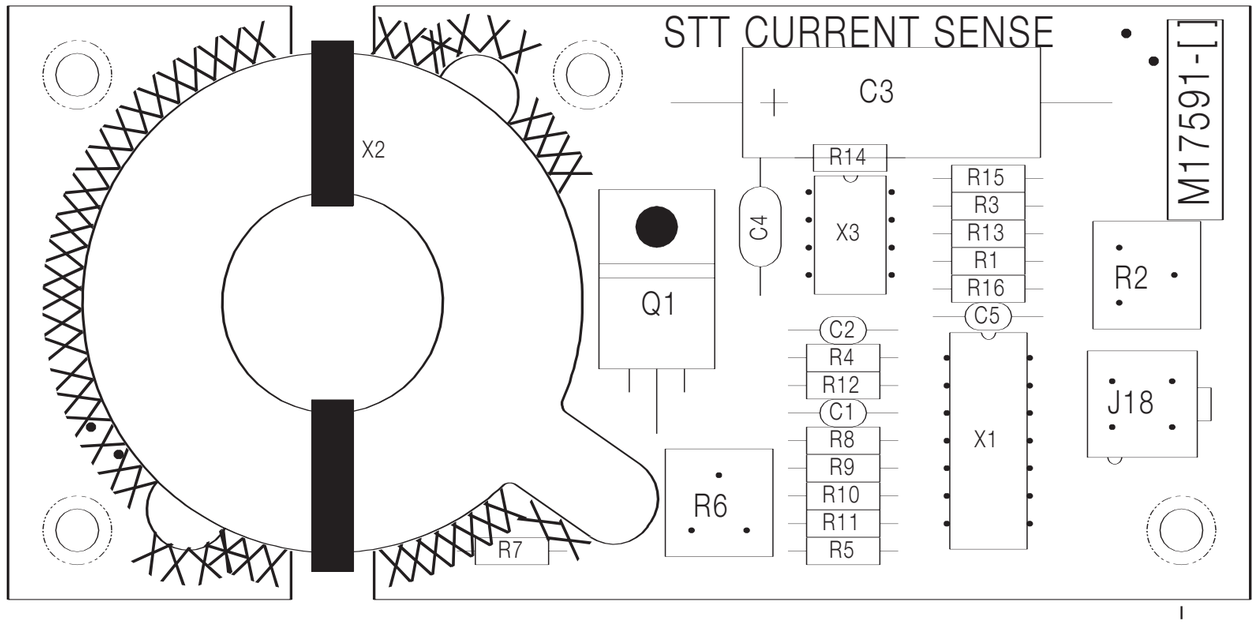


| ITEM | REQ'D | PART NO. | DESCRIPTION |
|---|---|---|---|
| C1, C5 | 2 | S16668-5 | .022/50 |
| C2 | 1 | S16668-9 | 150pF/100 |
| C3 | 1 | S13490-72 | 50/50 |
| C4 | 1 | S16668-11 | .1/50 |
| J18 | 1 | S18248-4 | HEADER |
| Q1 | 1 | T12704-62 | TRANSISTOR-N, T220, 3A, 100V |
| R1, R14 | 2 | S19400-1501 | 1.5K 1/4W |
| R2 | 1 | T10812-73 | 2K 1/2W TRIMMER |
| R3, R4 | 2 | S19400-1001 | 1K 1/4W |
| R5, R12 | 2 | S19400-1000 | 100 1/4W |
| R6 | 1 | T10812-77 | 20K 1/2W TRIMMER |
| R7 | 1 | S19400-6811 | 6.81K 1/4W |
| R8, R11 | 2 | S19400-6813 | 681K 1/4W |
| R9, R10, | 2 | S19400-1372 | 13.7K 1/4W |
| R13 | 1 | S19400-2941 | 2.94K 1/4W |
| R15 | 1 | S19400-10R0 | 10 1/4W |
| R16 | 1 | S19400-1002 | 10K 1/4W |
| X1 | 1 | S15128-16 | LINEAR INTEGRATED CIRCUIT |
| X2 | 1 | S18504-1 | CURRENT SENSOR |
| X3 | 1 | S15128-10 | VOLTAGE REF. |

CAPACITORS = MFD/VOLTS

LINCOLN ELECTRIC

**NOTE:** Lincoln Electric assumes no responsibility for liablilities resulting from board level troubleshooting. PC Board repairs will invalidate your factory warranty. **Individual Printed Circuit Board Components are not available from Lincoln Electric.** This information is provided for reference only. Lincoln Electric discourages board level troubleshooting and repair since it may compromise the quality of the design and may result in danger to the Machine Operator or Technician. Improper PC board repairs could result in damage to the machine.



Return to Section TOC
Return to Master TOC

## Schematic - Remote Protection PC Board - All Codes - (M17609)

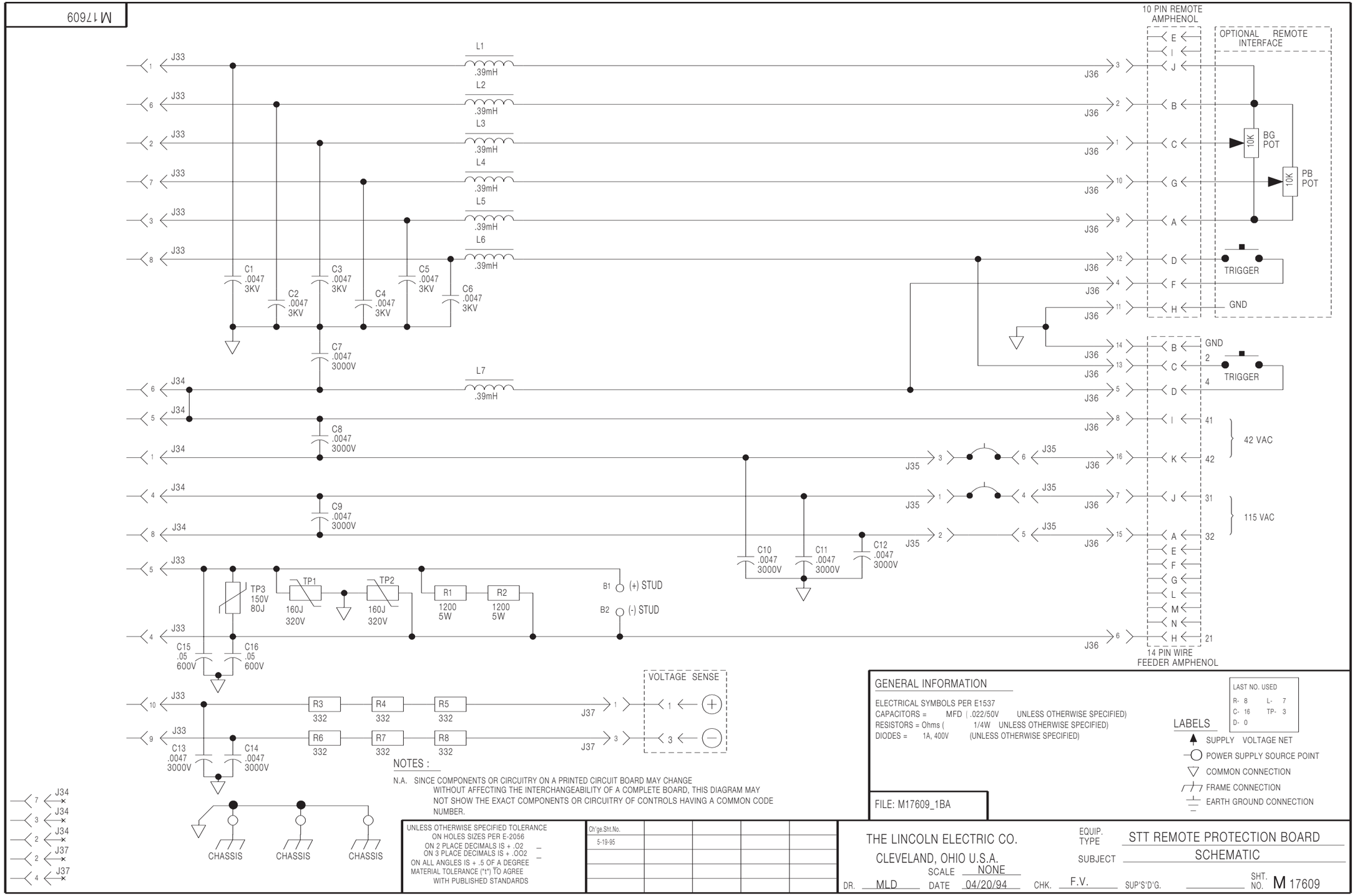


NOTE: Lincoln Electric assumes no responsibility for liablilities resulting from board level troubleshooting. PC Board repairs will invalidate your factory warranty. **Individual Printed Circuit Board Components are not available from Lincoln Electric.** This information is provided for reference only. Lincoln Electric discourages board level troubleshooting and repair since it may compromise the quality of the design and may result in danger to the Machine Operator or Technician. Improper PC board repairs could result in damage to the machine.



Return to Section TOC
Return to Master TOC

## PC Board Assembly - Remote Protection - All Codes - (L9657)

L9657-3 | ENGINEERING CONTROLLED | CHANGE DETAIL: NEW
MANUFACTURER: No

**P.C. BOARD BLANK INFORMATION**
MAKE FROM S19399 (MAKES 6 BOARDS PER PANEL, SEE ELECTRONIC FILE FOR ADDITIONAL INFORMATION)

**BLANK PART NUMBER L9657-D**

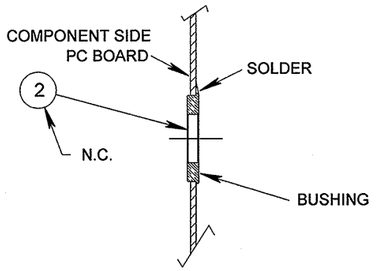


SECTION THRU BUSHING
SOLDER DETAIL

| ITEM | QTY | PART NUMBER | DESCRIPTION |
|---|---|---|---|
| 1 | 1 | SEE BLANK | PC BOARD BLANK |
| REFER TO ELECTRONIC COMPONENT DATABASE FOR SPECIFICATIONS ON ITEMS LISTED BELOW | | | |
| **REFERENCES** | **QTY** | **PART NUMBER** | **DESCRIPTION** |
| B1, B2 | 2 | S21421-1 | P.C. BOARD BUSHING |
| C1, C2, C3, C4, C5, C6, C7, C8, C9, C10, C11, C12, C13, C14 | 14 | T11577-58K | CAPACITOR,CD,.0047,3000V,20% |
| C15, C16 | 2 | T11577-46K | CAPACITOR,CD,.05,600V,+80/-20% |
| J33 | 1 | S18248-10 | CONNECTOR,MOLEX,MINI,PCB,10-PIN |
| J34 | 1 | S18248-8 | CONNECTOR,MOLEX,MINI,PCB,8-PIN |
| J35 | 1 | S18248-6 | CONNECTOR,MOLEX,MINI,PCB,6-PIN |
| J36 | 1 | S18248-16 | CONNECTOR,MOLEX,MINI,PCB,16-PIN |
| J37 | 1 | S18248-4 | CONNECTOR,MOLEX,MINI,PCB,4-PIN |
| L1, L2, L3, L4, L5, L6, L7 | 7 | T12218-9 | CHOKE,RF,390UH,5%, 225MA,CONFORMAL |
| R1, R2 | 2 | T14648-10 | RESISTOR,WW,5W,1.2K,5%,SQ |
| R3, R4, R5, R6, R7, R8, R9, R10, R11, R12, R13, R14, R15, R16, R17, R18, R19, R20 | 18 | S19400-1001 | RESISTOR,MF,1/4W,1.00K,1% |
| TP1, TP2, TP4 | 3 | T13640-18 | MOV,320VRMS,150J,20MM |
| TP3 | 1 | T13640-16 | MOV,150VRMS,80J,20MM |

CAPACITORS = MFD/VOLTS
INDUCTANCE = HENRYS

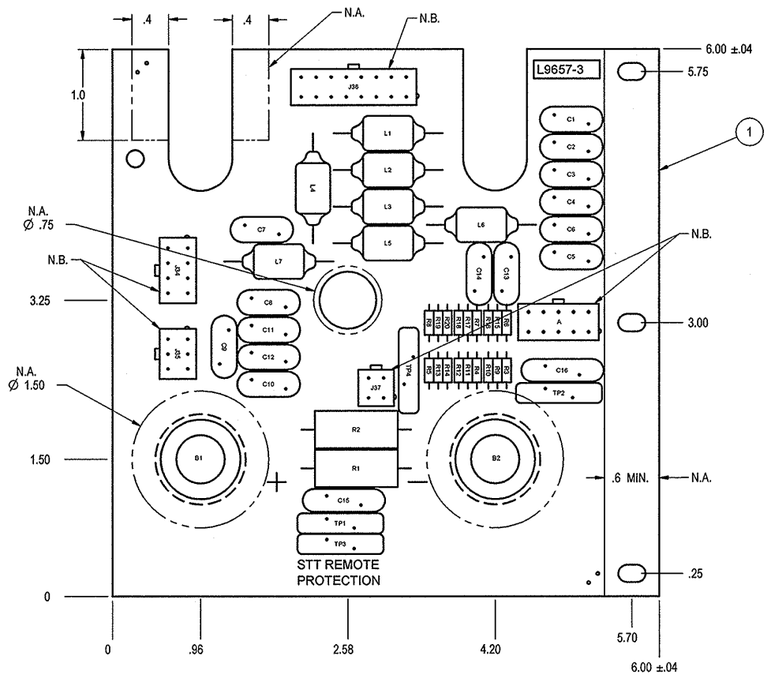


NOTES:

N.A. KEEP THESE AREAS FREE OF ENCAPSULATION MATERIAL.

N.B. KEEP MOLEX FREE OR ENCAPSULATION MATERIAL (5 PLACES).

N.C. PRESS BUSHING INTO OPPOSITE COMPONENT SIDE OF BOARD. CONTINUOUS FILLET OF SOLDER REQUIRED ON OPPOSITE COMPONENT SIDE. NO PROJECTION OF SOLDER PERMITTED IN HOLE, OR ON OR ABOVE SURFACE OF BUSHING. FACES AND HOLE OF BUSHING MAY BE MACHINED TO BARE BRASS.

MANUFACTURED AS:
L9657-3D0
IDENTIFICATION CODE

MAKE PER E1911
ENCAPSULATE WITH E1844 (2 COATS)
TEST PER E3472-RM
SCHEMATIC REFERENCE: M17609-3D0

**ALL COMPONENTS AND MATERIALS USED IN THIS ASSEMBLY ARE TO BE RoHS COMPLIANT PER E4253.**

**PROPRIETARY & CONFIDENTIAL:** THIS DOCUMENT CONTAINS PROPRIETARY INFORMATION OWNED BY LINCOLN GLOBAL, INC. AND MAY NOT BE DUPLICATED, COMMUNICATED TO OTHER PARTIES OR USED FOR ANY PURPOSE WITHOUT THE EXPRESS WRITTEN PERMISSION OF LINCOLN GLOBAL, INC.

| | | | | | | |
|---|---|---|---|---|---|---|
| UNLESS OTHERWISE SPECIFIED TOLERANCE MANUFACTURING TOLERANCE PER E2056 ON 2 PLACE DECIMALS IS ± .02 ON 3 PLACE DECIMALS IS ± .002 ON ALL ANGLES IS ± .5 OF A DEGREE MATERIAL TOLERANCE (T1) TO AGREE WITH PUBLISHED STANDARDS. DO NOT SCALE THIS DRAWING | DESIGN INFORMATION DRAWN BY: FBI ENGINEER: APPROVED: DK | REFERENCE: L9657-2 SCALE: 1:1 | EQUIPMENT TYPE: INVERTER STT | PAGE 1 OF 1 | | |
| | | | SUBJECT: REMOTE PROTECTION P.C. BOARD ASSEMBLY | | DOCUMENT NUMBER: L9657-3 | DOCUMENT REVISION: A |
| | | | MATERIAL DISPOSITION: NA | APPROVAL DATE: 6/9/2006 | PROJECT NUMBER: CRM38136-A | |

STRP

LINCOLN ELECTRIC **NOTE:** Lincoln Electric assumes no responsibility for liablilities resulting from board level troubleshooting. PC Board repairs will invalidate your factory warranty. **Individual Printed Circuit Board Components are not available from Lincoln Electric.** This information is provided for reference only. Lincoln Electric discourages board level troubleshooting and repair since it may compromise the quality of the design and may result in danger to the Machine Operator or Technician. Improper PC board repairs could result in damage to the machine.



Return to Section TOC Return to Master TOC